YKK

*Little Parts. Big Difference.*

# Plastic Hardware Catalogue

## Standard Products

Fastening Products Group

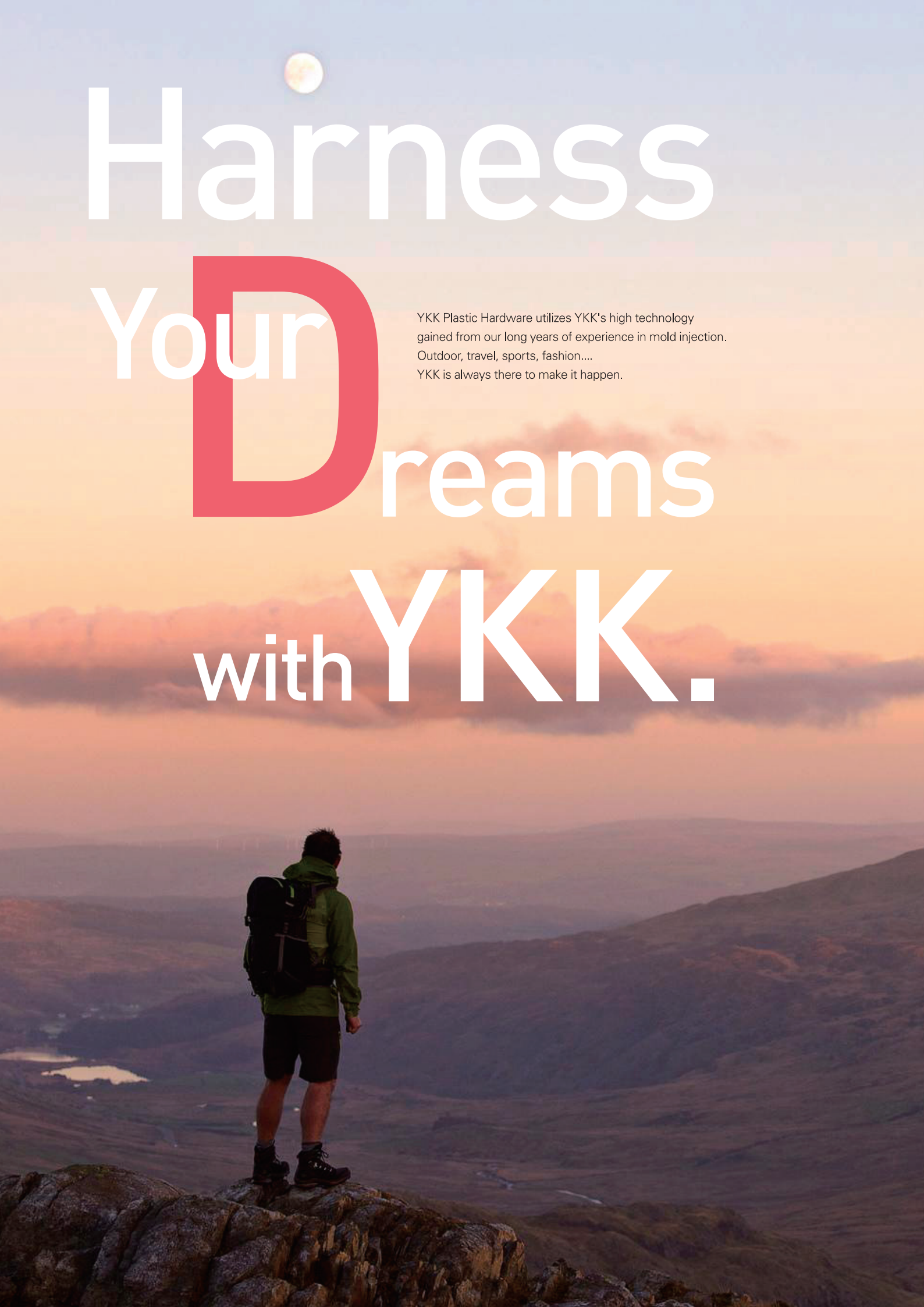
Harness
Your Dreams
with YKK.
YKK Plastic Hardware utilizes YKK's high technology
gained from our long years of experience in mold injection.
Outdoor, travel, sports, fashion....
YKK is always there to make it happen.

# Standard Products Index / 標準產品索引一覽

## Buckle
旁開扣
前開扣
轉鎖扣

**LB-GV** P.10

**LB-GVD** P.10

**LB-GVS** P.11

**LB-GP** P.12

**LB-GPD** P.12

**LB-GPS** P.13

**LB-SSC** P.14

**LB-SSWC** P.14

**LB-SS** P.15

**LB-SSD** P.15

**LB-SSS** P.16

**LM-SS** P.16

**LB-CV** P.17

**LB-YC** P.18

**LB-YCD** P.18

**LB-YCS** P.19

**LB-YCT** P.19

**LM-YC** P.19

**LB-TS** P.20

**LB-TSD** P.20

**LM-TS** P.21

**LB-RT** P.22

**LB-MP** P.23

**LB-EQ** P.23

**LB-LW** P.24

**LB-LWD** P.24

**LB-LWS** P.25

**LB-LWH** P.25

**LM-LW** P.25

**LB-MV** P.26

**LB-MVD** P.26

**LB-MVS** P.27

**LB-MVW** P.28

**LM-MV** P.28

**LB-HE** P.29

**LB-HED** P.29

**LB-LV** P.30

**LB-LVD** P.30

**LB-LVS** P.31

**LM-LV** P.31

**LB-WG** P.32

These fastening products are aimed at the apparel and luggage industries, but technical assistance and support are available for users interested in other applications.

本產品主要係針對皮包、成衣類等等所開發之商品。
如有特殊用途之要求、或有不明瞭之處請洽詢營業人員。

# Standard Products Index / 標準產品索引一覽


**LB-WGD** P.33

SHOCKONLOC®

**LB-WGS** P.33

SHOCKONLOC®

**LB-WG1** P.34

**LB-WGD1** P.35

**LB-WGS1** P.35

**LB-PT** P.36

HAMMERLOC®

**LB-PTD** P.36

HAMMERLOC®

**LB-PTS** P.37

HAMMERLOC®

**LB-PTA** P.37

HAMMERLOC®

**LM-PT** P.38

HAMMERLOC®

**LB-PTC** P.38

HAMMERLOC®

**LM-D / DB** P.39

**LM-DH / DHB** P.39

**LB-R** P.40

**LB-RD** P.40

**LB-RP** P.41

UL Approved

**LB-RND** P.42

**LB-X** P.43

CYBERLOC®

**LB-XD** P.43

CYBERLOC®

**LB-XC** P.44

**LB-RH** P.44

**LB-RC** P.44

**LB-PC** P.45

**LB-LB** P.45

Minimal

**LB-LS** P.45

Minimal

**LB-RS** P.46

Thin

**LB-S** P.46

**IB-FX** P.47

**LB-FR** P.47

Minimal

**LB-F2** P.48

**LB-FU** P.48

**LB-Q** P.49

Rotatable

**WB-S1** P.49

Suspender

**LB-FW2 / FW** P.50

3way

**WB-H** P.51

Belt Buckle

**WB-HS** P.51

Belt Buckle

**WB-DA2** P.52

Belt Buckle

**WB-DAH1** P.52

Belt Buckle

## Cam Buckle
調整扣

**LA-CB** P.53

**LA-CN** P.53

## I.D. Card Holder
名片夾

**LJ-H / HW** P.54

# Standard Products Index / 標準產品索引一覽

## Strap Adjuster
梯扣


LK-GV P.55

LK-GVS P.55

LK-YC P.56

LK-YCS P.56

LK-TS P.56

LK-HC P.57

LK-EA P.57

LK-WG P.58

LK-WGS P.58

LK-WL P.58

LK-LV P.59

LK-LVS P.59

LK-PT P.60

LK-U P.60

LK-KU P.60

LK-E / EK P.61

LK-M P.61

LK-TSR P.61

## Clip
織帶夾


LH-GYC P.62

LH-CS P.62

## Loop
分帶片
方型環


LA-RH P.62

LA-PYB P.62

LT-K P.63

LH-E P.63

LT-TG P.63

## Tri-Bar Adjuster
日型環


LA-S P.64

## Wedge Adjuster
日型環


LH-W P.64

LH-WJ P.65

LA-EJ P.65

## Clip
織帶夾


LA-AXA / AXB P.66

LH-SG P.66

LA-PS P.66

## Snap Hook
旋轉鉤


LN-SA P.67

LN-ALK P.67

# Standard Products Index / 標準產品索引一覽


**LN-SM** P.68 — Metal Spring
**LN-AS** P.68 — Plastic Spring
**LN-M1S** P.69 — Metal Spring
**LN-M2S** P.69 — Metal Spring
**LN-ML** P.70 — Plastic Spring
**LN-AR1** P.70 — Swivel & Rotate
**LN-RE** P.71 — Swivel & Rotate

**LF-CH** P.72
**LF-HA** P.72
**LN-SX** P.73
**LN-KH** P.73
**LN-ZR** P.74 — Swivel & Rotate
**LN-Z** P.74 — Swivel & Rotate

## D-Ring
D型環

**LD-KN** P.75 — New
**LD-S** P.75
**LD-E** P.75
**LD-K** P.75
**LD-R** P.76
**LD-RE** P.76

**LD-TW** P.76 — Twist

## Cord Stopper
繩索扣

**LC03WL** P.77 — New — Plastic Spring
**LC05PC** P.77 — New — Metal Spring
**LC05PD** P.77 — New — Metal Spring
**LC05SR** P.78 — Plastic Spring
**LC05KW** P.78 — Plastic Spring

**LC05HW** P.78 — Plastic Spring
**LC05RW** P.78 — Plastic Spring
**LC05KH** P.78 — Plastic Spring
**LC05SC** P.79 — Plastic Spring
**LC05SB** P.79 — Plastic Spring
**LC05WC** P.79 — Plastic Spring
**LC05WF** P.79 — Plastic Spring

**LC03PE** P.79 — Metal Spring

## Cord Holder
耳機孔

**LC05UG** P.80 — Sewable
**LC02US / LC10US** P.80 — Sewable
**LC02UC** P.81 — Sewable
**LC02UH2** P.81 — Sewable

**LC05EL** P.81 — Sewable
**LE-AT** P.82 — New — ICE AXE Tool

## Zipper Cover
拉鏈蓋

**WZ-CO** P.83 — ZIPCAP® Outer-Cap
**WZ-SI / WZ05NI** P.83 — ZIPCAP® Innerer-Cap
**LZ05DLW** P.83 — Key Lock

# Standard Products Index / 標準產品索引一覽

## Cord End
繩尾扣

**LE03NK** P.84

**LE05WA1** P.84

**LE03SV** P.84

**LE03WV** P.84

**LE03CMT** P.84

**LE01STT** P.84

**LE07CP** P.85

**LE03PC** P.85

**LE05CE** P.85

**LE03PB** P.85

## Zipper Pull
拉片扣

**LE02PA** P.86

## Tag Holder
吊牌扣

**IJ01SC** P.86

## Belt Adjuster
帽扣

**5BS AABL** P.87

**3BR NR06 / 3BR NR08** P.87

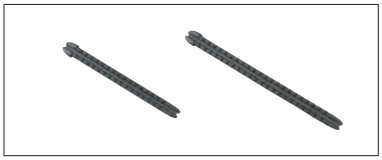

## Paper Clip
迴紋針

**IC20RY** P.87

## Cord Insert Puller
繩索拉片

**CP0010A** P.88

**CP0011A** P.88

**CP0012A** P.88

**CP0013A** P.88

**CP0014A** P.88

**CP0015A** P.88

**CP002A** P.89

**CP004A** P.89

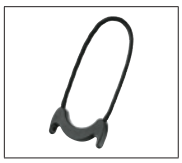

## Tape End
織帶尾夾

**1QiBD-E** P.90

**WE-DA1** P.90

**LE-B** P.90

**LE-PW** P.90

## Metal Adjuster
梯扣

**AK-W** P.91

**AK-WL** P.91

These fastening products are aimed at the apparel and luggage industries, but technical assistance and support are available for users interested in other applications.

本產品主要係針對皮包、成衣類等等所開發之商品。
如有特殊用途之要求、或有不明瞭之處請洽詢營業人員。

# INDEX


## A

AK-W ..... 91
AK-WL ..... 91

## C

CP002A ..... 89
CP004A ..... 89
CP0010A ..... 88
CP0011A ..... 88
CP0012A ..... 88
CP0013A ..... 88
CP0014A ..... 88
CP0015A ..... 88

## I

IB-FX ..... 47
IC20RY ..... 87
IJ01SC ..... 86

## L

LA-AXA/AXB ..... 66
LA-CB ..... 53
LA-CN ..... 53
LA-EJ ..... 65
LA-PS ..... 66
LA-PYB ..... 62
LA-RH ..... 62
LA-S ..... 64
LB-CV ..... 17
LB-EQ ..... 23
LB-F2 ..... 48
LB-FR ..... 47
LB-FU ..... 48
LB-FW2/FW ..... 50
LB-GP ..... 12
LB-GPD ..... 12
LB-GPS ..... 13
LB-GV ..... 10
LB-GVD ..... 10
LB-GVS ..... 11
LB-HE ..... 29
LB-HED ..... 29
LB-LB ..... 45
LB-LS ..... 45
LB-LV ..... 30
LB-LVD ..... 30
LB-LVS ..... 31
LB-LW ..... 24
LB-LWD ..... 24
LB-LWH ..... 25
LB-LWS ..... 25
LB-MP ..... 23
LB-MV ..... 26
LB-MVD ..... 26
LB-MVS ..... 27
LB-MVW ..... 28
LB-PC ..... 45
LB-PT ..... 36
LB-PTA ..... 37
LB-PTC ..... 38
LB-PTD ..... 36
LB-PTS ..... 37
LB-Q ..... 49
LB-R ..... 40
LB-RC ..... 44
LB-RD ..... 40
LB-RH ..... 44
LB-RND ..... 42
LB-RP ..... 41
LB-RS ..... 46
LB-RT ..... 22
LB-S ..... 46
LB-SS ..... 15
LB-SSC ..... 14
LB-SSD ..... 15
LB-SSS ..... 16
LB-SSWC ..... 14
LB-TS ..... 20
LB-TSD ..... 20
LB-WG ..... 32
LB-WG1 ..... 34
LB-WGD ..... 33
LB-WGD1 ..... 35
LB-WGS ..... 33
LB-WGS1 ..... 35
LB-X ..... 43
LB-XC ..... 44
LB-XD ..... 43
LB-YC ..... 18
LB-YCD ..... 18
LB-YCS ..... 19
LB-YCT ..... 19
LC02UC ..... 81
LC02UH2 ..... 81
LC02US/LC10US ..... 80
LC03PE ..... 79
LC03WL ..... 77
LC05EL ..... 81
LC05HW ..... 78
LC05KH ..... 78
LC05KW ..... 78
LC05PC ..... 77
LC05PD ..... 77
LC05RW ..... 78
LC05SB ..... 79
LC05SC ..... 79
LC05SR ..... 78
LC05UG ..... 80
LC05WC ..... 79
LC05WF ..... 79
LD-E ..... 75
LD-K ..... 75
LD-KN ..... 75
LD-R ..... 76
LD-RE ..... 76
LD-S ..... 75
LD-TW ..... 76
LE-AT ..... 82
LE-B ..... 90
LE-PW ..... 90
LE01STT ..... 84
LE02PA ..... 86
LE03CMT ..... 84
LE03NK ..... 84
LE03PB ..... 85
LE03PC ..... 85
LE03SV ..... 84
LE03WV ..... 84
LE05CE ..... 85
LE05WA1 ..... 84
LE07CP ..... 85
LF-CH ..... 72
LF-HA ..... 72
LH-CS ..... 62
LH-E ..... 63
LH-GYC ..... 62
LH-SG ..... 66
LH-W ..... 64
LH-WJ ..... 65
LJ-H/HW ..... 54
LK-E/EK ..... 61
LK-EA ..... 57
LK-GV ..... 55
LK-GVS ..... 55
LK-HC ..... 57
LK-KU ..... 60
LK-LV ..... 59
LK-LVS ..... 59
LK-M ..... 61
LK-PT ..... 60
LK-TS ..... 56
LK-TSR ..... 61
LK-U ..... 60
LK-WG ..... 58
LK-WGS ..... 58
LK-WL ..... 58
LK-YC ..... 56
LK-YCS ..... 56
LM-D/DB ..... 39
LM-DH/DHB ..... 39
LM-LV ..... 31
LM-LW ..... 25
LM-MV ..... 28
LM-PT ..... 38
LM-SS ..... 16
LM-TS ..... 21
LM-YC ..... 19
LN-ALK ..... 67
LN-AR1 ..... 70
LN-AS ..... 68
LN-KH ..... 73
LN-M1S ..... 69
LN-M2S ..... 69
LN-ML ..... 70
LN-RE ..... 71
LN-SA ..... 67
LN-SM ..... 68
LN-SX ..... 73
LN-Z ..... 74
LN-ZR ..... 74
LT-K ..... 63
LT-TG ..... 63
LZ05DLW ..... 83

## W

WB-DA2 ..... 52
WB-DAH1 ..... 52
WB-H ..... 51
WB-HS ..... 51
WB-S1 ..... 49
WE-DA1 ..... 90
WZ-CO ..... 83
WZ-SI/WZ05NI ..... 83

## Other

1QiBD-E ..... 90
3BR NR06/3BR NR08 ..... 87
5BS AABL ..... 87

# Use this index / 各項目説明

Material
材質

**Available Material : 材質**

| | | | | | |
|---|---|---|---|---|---|
| POM | :Polyacetal | T-POM | :High Grade Polyacetal | PA | :Polyamide |
| PC | :Polycarbonate | TPE | :Thermo Plastic Elastomer | PP | : Polypropylene |
| ABS | : Acrylonitrile Butadiene Styrene | PBT | :Polybutylene Terephthalate | | |

Item
產品

Item code
品名

Item photo
產品照片

Logo/Print Available
可刻印／可印刷

Segment Icon
符號

Spec
規格

*Dimensional information is for reference only.
* 尺寸僅供參考用 .

Dimensional drawing
圖示表

Size variation scale ½
尺寸表

# Material presentation / 材質説明

**Polyacetal (POM)**

POM, a crystalline thermoplastic resin, is YKK's main raw material.
POM has a unique combination of properties that bridges the gap between metals and ordinary plastics with stiffness, hardness, dimensional stability, toughness, fatigue resistance, solvent and fuel resistance, abrasion resistance, low wear and low friction.
POM is recommended for high performance applications in a wide range of environmental conditions.
The recommended short-term range of operating temperature is –40C to 130C (–40F to 270F).

**Tough-Polyacetal (T-POM)**

T-POM is an impact modified polyacetal resin.
T-POM maintains excellent tensile strength, stiffness, hardness, dimensional stability, chemical resistance, as well as improved impact strength. This material can bridge the gap between ordinary POM and PA resin.

**Polyamide (PA)**

PA is a crystalline thermoplastic polyamide resin, which has good tensile strength, chemical resistance, stiffness and flexibility. On the other hand, PA readily absorbs moisture. Its properties will vary as humidity changes.
The tensile strength will be lower and the impact strength will be higher with higher moisture absorption.

**Polycarbonate (PC)**

PC is a thermoplastic resin with good transparency. PC is tough, with good dimensional stability, and excels other engineering plastics in impact strength. But PC is inferior in chemical resistance to acids, alkalis and organic solvents in particular.
PC is recommended for applications that require strength and transparency.
The recommended short-term range of operating temperature is –40C to 130C (–40F to 270F).

**Thermo plastic elastomer (TPE)**

TPE is a thermoplastic elastomer that has a block interpolymerization structure comprising soft segments and hard segments, which create flexibility and elasticity in the same molecule chain.
TPE provides good flexibility at low temperatures, toughness, excellent impact strength, and good strength at high temperatures. The recommended short-term range of operating temperature is –40C to 150C (–40F to 300F).

**Polypropylene (PP)**

PP is a thermoplastic resin with good chemical resistance. Lighter than most polymers, it will float on water.
PP has a lower tensile strength and can contract to some degree after injection molding.
Its recommended temperature range is –35C to 65C (–30F to 150F).

**Acrylonitrile Butadiene Styrene (ABS)**

ABS is a thermoplastic resin co-polymerized from acrylonitrile, butadiene, and styrene. It has good transparency and chemical resistance. It has good stiffness and toughness. The recommended range of operating temperature is –40C to 70C (–40F to 160F).

**Polybutylene terephthalate (PBT)**

PBT Resin (polybutylene terephthalate) is a thermally engineered plastic which is mainly composed of terephthalic acid and butylene glycol.
These plastic parts feature superior anti-abrasion and wear resistance characteristics, and offer superior dimensional stability.
Outstanding chemical resistance. Good electrical properties.
Weakness for strong acid and strong alkali.
Melting temperature reaches to 225C(437F), high deflection temperature.
The recommended range of operating temperature is –20C to 160C (–4F to 320F).

# Mark Presentation / 符號說明

## Backpack (Bag)

- This icon expresses that the item is particulary relevant to Backpacks, Running Packs, Sports Bags, Messenger Bags, and Luggage.
- 這符號中的品名表示適合背包。
- 它包括慢跑包(腰包)，運動包，郵差包和行李箱。專為背包設計，具有多功能性和耐用性。

### Example items

LB-GV

LK-GV

LC-WL

LN-SA

LD-K

## Apparel

- This icon expresses that this item is particulary relevant to Apparel.
- It also includes  clothes, pants and waist belts.
- 這符號中的品名表示適合服裝產品。包括衣服，褲子和腰帶。
- 專為服裝產品而設計，具有卓越的操作性和視覺效果。

### Example items

LC-HW

WB-H

LE-NK

LC05PD

LC0012A

## Others

- This icon expresses that the item is particulary relevant to special other applicatrions such as Shoes, Helmets and Caps.
- 這符號中的品名表示適合其它類別，如鞋子，頭盔和帽子。 專為具有多功能和獨創性的產品而設計。

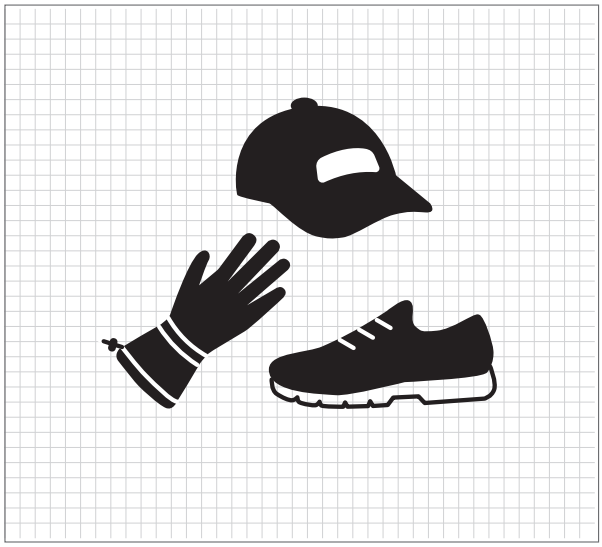

### Example items

LB-LS

LB-FW2

LJ-H

IJ-SC

BR-NR

## LB-GV | Side-Release 旁開扣 | POM

**Single Adjuster** **Break Resistant**

- The unique spring design provides higher durability and soft release feature.
- The center cut-out socket and beveled edge design provides light weight feature.
- YKK's vertical engagement system provides higher tensile strength.

- 獨特的彈力設計，使開合更加滑順並提升耐用度。
- 輕量化造型。
- YKK 獨特公母扣卡榫專利扣合設計。

| CODE | SIZE | A | B | C | D |
|---|---|---|---|---|---|
| LB10GV | 10mm | 10 | 17 | 35 | 8 |
| LB16GV | 16mm | 17 | 23 | 40 | 9 |
| LB20GV | 20mm | 21 | 28 | 47 | 10 |
| LB25GV | 25mm | 26 | 34 | 56 | 12 |
| LB38GV | 38mm | 39 | 47 | 67 | 14 |

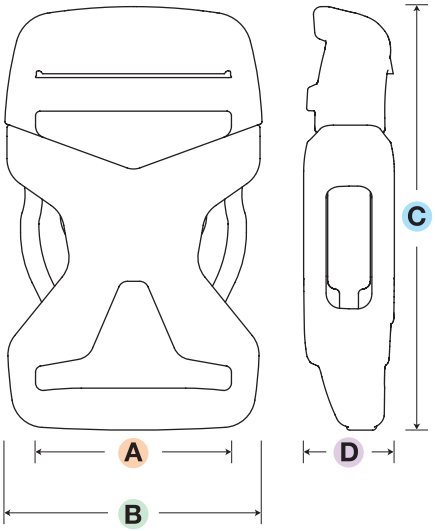


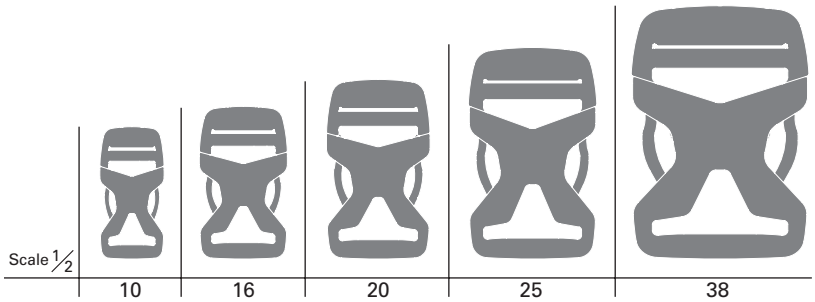

## LB-GVD | Side-Release 旁開扣 | POM

**Dual Adjuster** **Break Resistant**

- The unique spring design provides higher durability and soft release feature.
- The center cut-out socket and beveled edge design provides light weight feature.
- YKK's vertical engagement system provides higher tensile strength.
- Dual adjustment.

- 獨特的彈力設計，使開合更加滑順並提升耐用度。
- 輕量化造型。
- 兩側皆可調整織帶。

| CODE | SIZE | A | B | C | D |
|---|---|---|---|---|---|
| LB16GVD | 16mm | 17 | 23 | 47 | 9 |
| LB20GVD | 20mm | 21 | 28 | 55 | 10 |
| LB25GVD | 25mm | 26 | 34 | 64 | 12 |
| LB38GVD | 38mm | 39 | 47 | 77 | 14 |

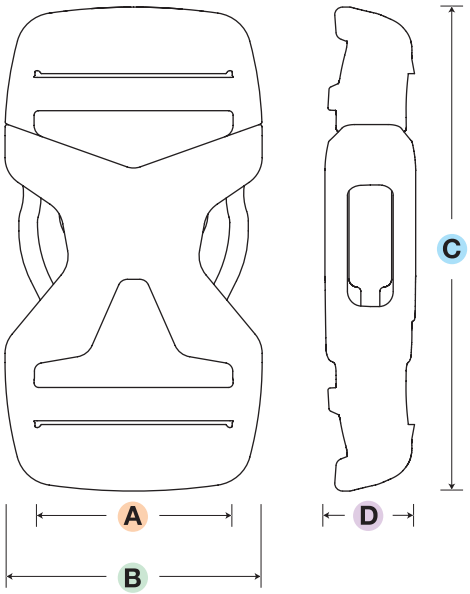


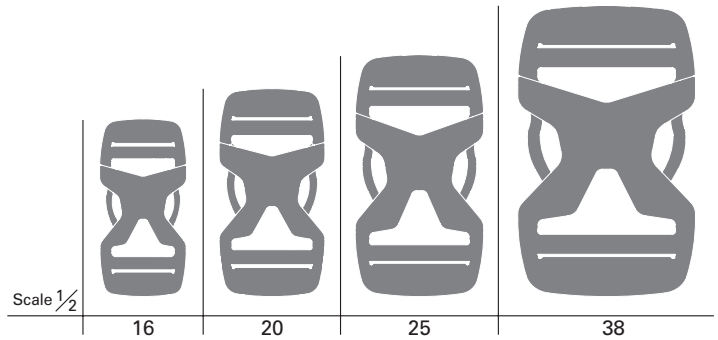

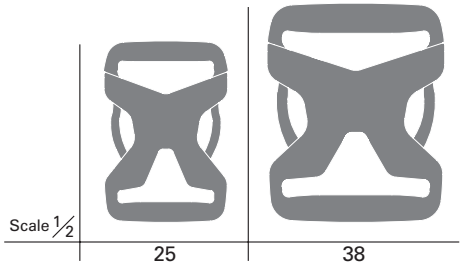


## LB-GVS

**Side-Release** 旁開扣 **POM**

**Non Adjustable** **Break Resistant**

- The unique spring design provides higher durability and soft release feature.
- The center cut-out socket and beveled edge design provides light weight feature.
- YKK's vertical engagement system provides higher tensile strength.
- Single bar, non-adjustment.

- 獨特的彈力設計，使開合更加滑順並提升耐用度。
- 輕量化造型。
- 公母扣織帶免調整設計。

| CODE | SIZE | A | B | C | D |
|---|---|---|---|---|---|
| LB25GVS | 25mm | 26 | 33 | 48 | 12 |
| LB38GVS | 38mm | 39 | 47 | 58 | 14 |

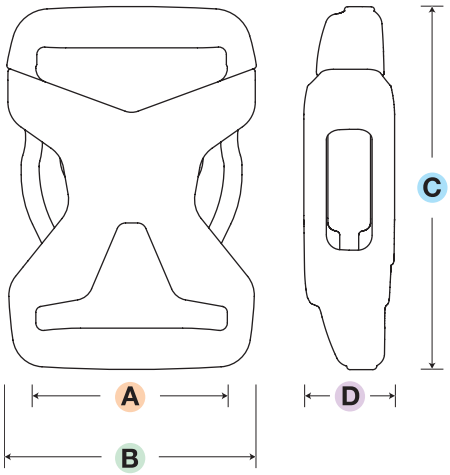

## LB-GP | Side-Release 旁開扣 | POM

**Single Adjuster** **Break Resistant**

- Unique center bar and connecting arm provides higher impact resistance and breakage resistance.
- New side shape curved design fits shape of finger, which enables easy adjustment.
- Glove friendly and easy release.

- 耐衝擊高強度款式。
- 母扣導角開放式設計，使扣合功能更順暢。
- 戴手套也可輕易操作。

| CODE | SIZE | A | B | C | D |
|---|---|---|---|---|---|
| LB10GP | 10mm | 11 | 16 | 30 | 7 |
| LB16GP | 16mm | 16 | 21 | 38 | 8 |
| LB20GP | 20mm | 21 | 27 | 46 | 9 |
| LB25GP | 25mm | 25 | 33 | 56 | 11 |
| LB38GP | 38mm | 39 | 46 | 62 | 12 |

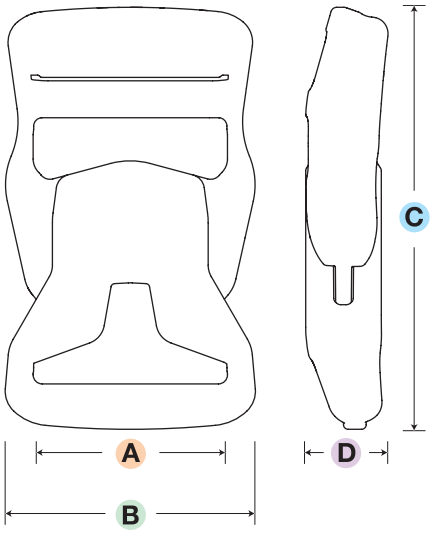


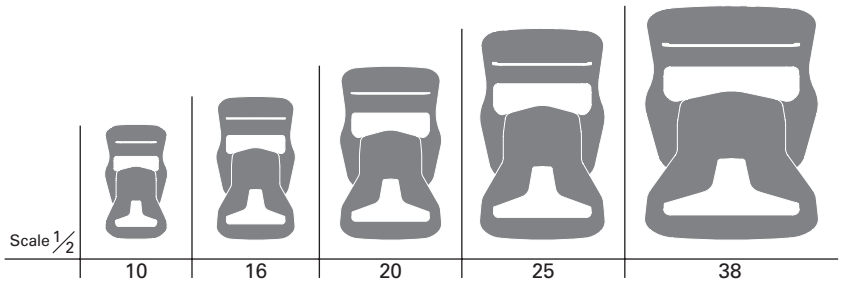

## LB-GPD | Side-Release 旁開扣 | POM

**Dual Adjuster** **Break Resistant**

- Unique center bar and connecting arm provides higher impact resistance and breakage resistance.
- New side shape curved design fits shape of finger, which enables easy adjustment.
- Glove friendly and easy release.
- Dual adjustment.

- 耐衝擊高強度款式。
- 母扣導角開放式設計，使扣合功能更順暢。
- 戴手套也可輕易操作。
- 兩側皆可調整織帶。

| CODE | SIZE | A | B | C | D |
|---|---|---|---|---|---|
| LB10GPD | 10mm | 11 | 17 | 37 | 7 |
| LB16GPD | 16mm | 17 | 22 | 46 | 8 |
| LB20GPD | 20mm | 21 | 27 | 54 | 9 |
| LB25GPD | 25mm | 25 | 33 | 64 | 11 |
| LB38GPD | 38mm | 39 | 46 | 71 | 12 |

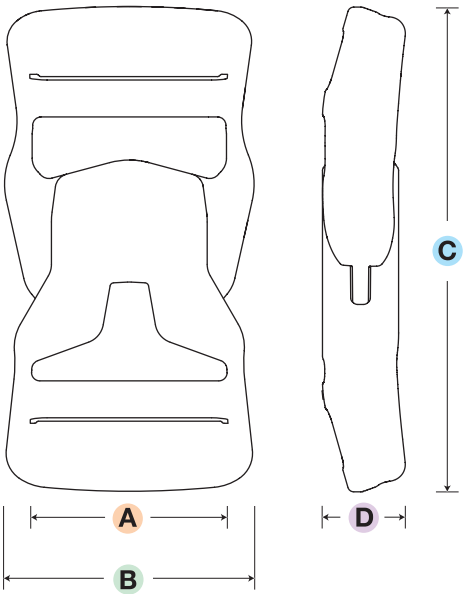


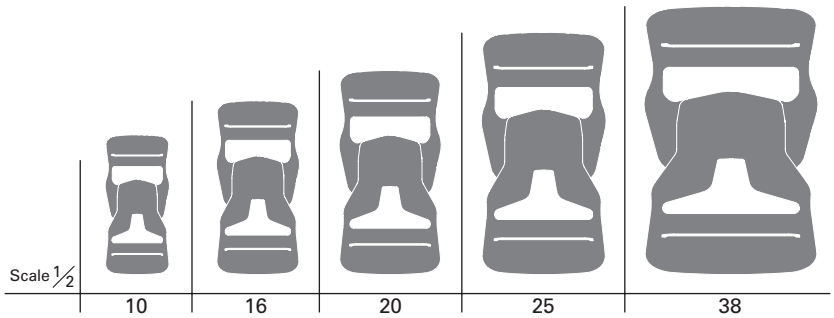

## LB-GPS

Side-Release 旁開扣

POM

**Non Adjustable** **Break Resistant**

- Unique center bar and connecting arm provides higher impact resistance and breakage resistance.
- New side shape curved design fits shape of finger, which enables easy adjustment.
- Glove friendly and easy release.
- Single bar, non-adjustment.

- 耐衝擊高強度款式。
- 母扣導角開放式設計，使扣合功能更順暢。
- 戴手套也可輕易操作。
- 公母扣織帶免調整設計。

| CODE | SIZE | A | B | C | D |
|---|---|---|---|---|---|
| LB20GPS | 20mm | 21 | 27 | 41 | 9 |
| LB25GPS | 25mm | 26 | 33 | 49 | 10 |
| LB38GPS | 38mm | 39 | 46 | 56 | 12 |

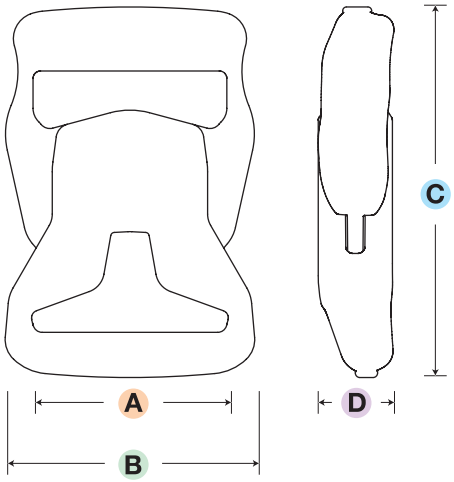


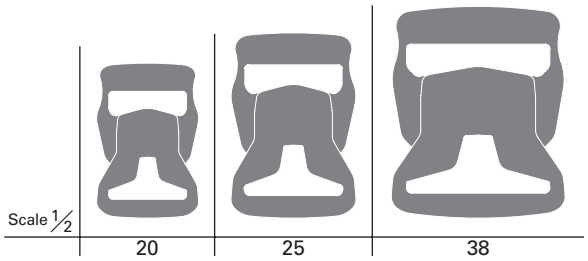

## Flapped Buckle

# LB-SSC | Side-Release 旁開扣 | POM

**Single Adjuster**

- Glove friendly and easy release.
- New cam design holds webbing tightly and reduces webbing slippage.
- Innovative cam release in one simple motion.

- 按壓面積加大，展現更佳的操作性。
- 單手調整織帶鬆緊。

| CODE | SIZE | A | B | C | D |
|---|---|---|---|---|---|
| LB20SSC | 20mm | 20 | 31 | 54 | 12 |
| LB25SSC | 25mm | 26 | 37 | 66 | 14 |
| LB38SSC | 38mm | 39 | 50 | 76 | 12 |

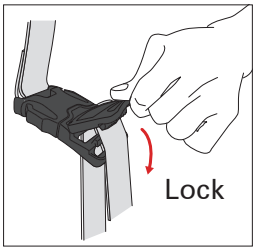


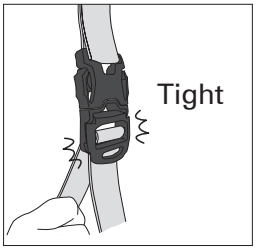


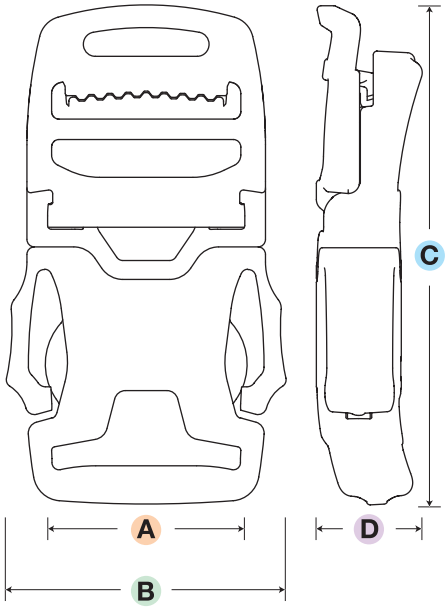


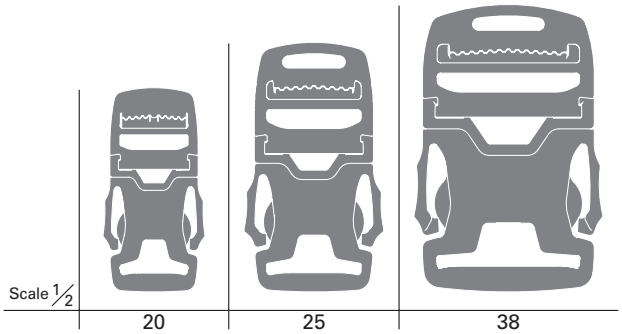


## Flapped Buckle

# LB-SSWC | Side-Release 旁開扣 | POM

**Dual Adjuster**

- Glove friendly and easy release.
- New cam design holds webbing tightly and reduces webbing slippage.
- Innovative cam release in one simple motion.
- Dual adjustment.

- 按壓面積加大，展現更佳的操作性。
- 單手調整織帶鬆緊。
- 兩側皆可調整織帶。

| CODE | SIZE | A | B | C | D |
|---|---|---|---|---|---|
| LB20SSWC | 20mm | 20 | 31 | 70 | 12 |

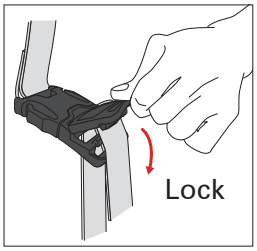


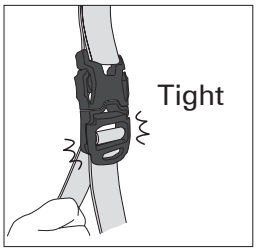


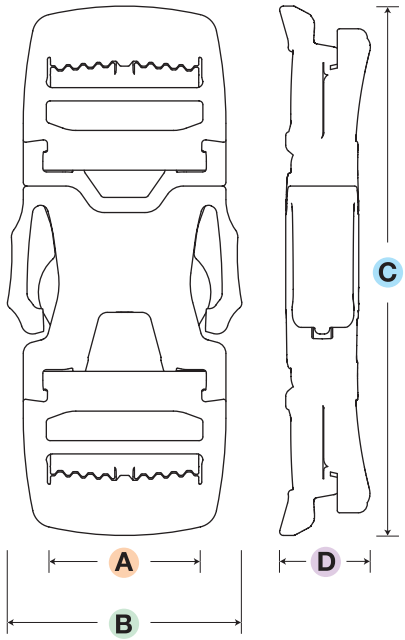

## LB-SS

Side-Release 旁開扣

POM

**Single Adjuster**

- Glove friendly and easy release.
- 按壓面積加大，展現更佳的操作性。

| CODE | SIZE | A | B | C | D |
|---|---|---|---|---|---|
| LB16SS | 16mm | 16 | 26 | 39 | 8 |
| LB20SS | 20mm | 21 | 31 | 47 | 12 |
| LB25SS | 25mm | 26 | 38 | 52 | 11 |
| LB38SS | 38mm | 39 | 50 | 63 | 12 |

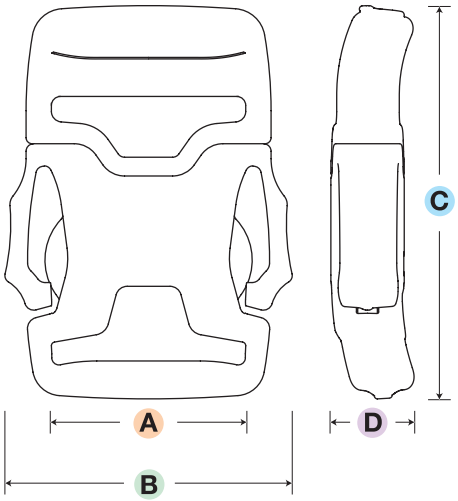


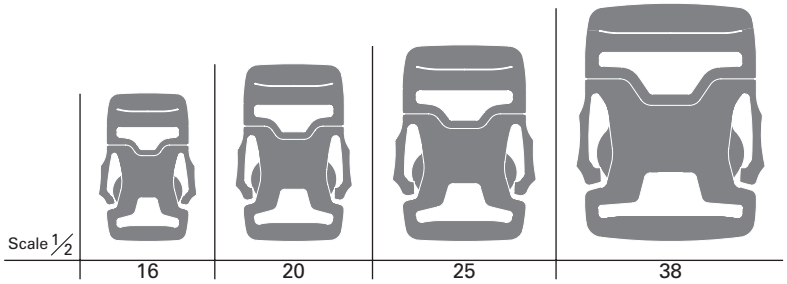

## LB-SSD

Side-Release 旁開扣

POM

**Dual Adjuster**

- Glove friendly and easy release.
- Dual adjustment.
- 按壓面積加大，展現更佳的操作性。
- 兩側皆可調整織帶。

| CODE | SIZE | A | B | C | D |
|---|---|---|---|---|---|
| LB16SSD | 16mm | 16 | 26 | 45 | 8 |
| LB20SSD | 20mm | 21 | 31 | 54 | 10 |
| LB25SSD | 25mm | 26 | 38 | 60 | 11 |
| LB38SSD | 38mm | 39 | 50 | 70 | 12 |

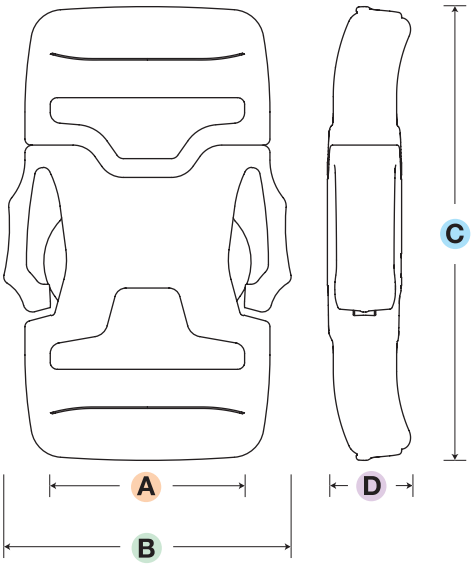


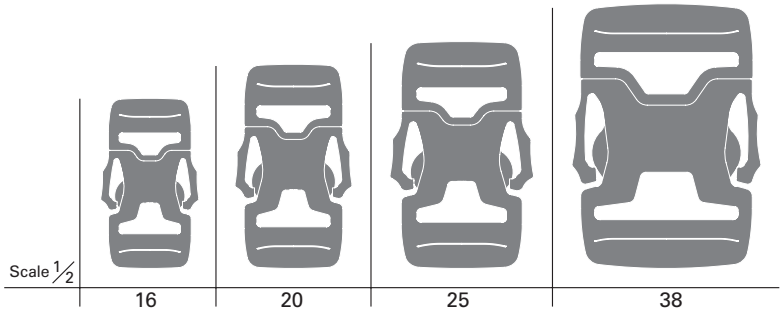

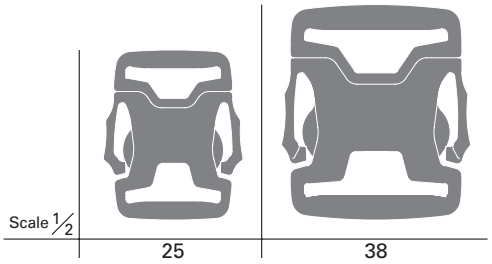


## LB-SSS | Side-Release 旁開扣 | POM

**Non Adjustable**

- Glove friendly and easy release.
- Single bar, non-adjustment.

- 按壓面積加大，展現更佳的操作性。
- 公母扣織帶免調整設計。

| CODE | SIZE | A | B | C | D |
|---|---|---|---|---|---|
| LB25SSS | 25mm | 26 | 37 | 45 | 13 |
| LB38SSS | 38mm | 39 | 50 | 57 | 12 |

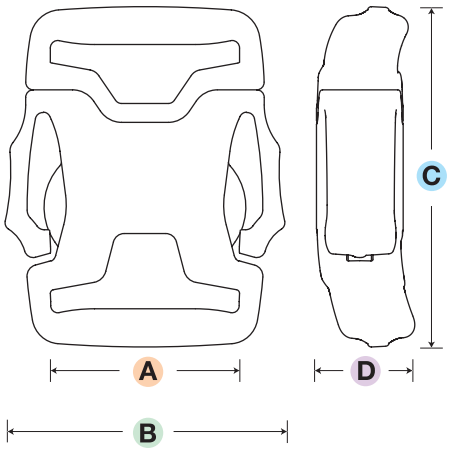

LM20LV Plate

## LM-SS | Side-Release 旁開扣 | POM

**Pouch Clip**

- Pouch-Clip.
- Glove friendly with easy release.

- 旁開壓鎖扣。
- 帶手套也可輕鬆操作。

| CODE | SIZE | A | B | C | D |
|---|---|---|---|---|---|
| LM20SS | 20mm | 21 | 30 | 41 | 15 |

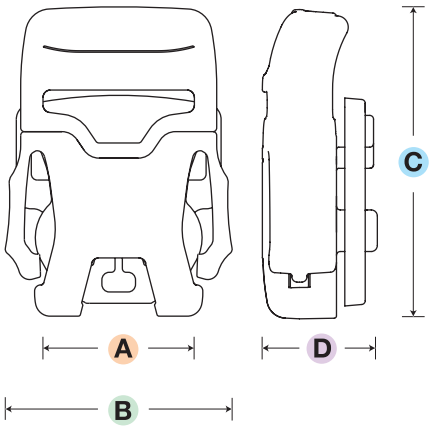

## LB-CV

**Side-Release** 旁開扣

**POM**

**Single Adjuster**

- Multi purpose standard side release buckle.
- 外型美觀。

| CODE | SIZE | A | B | C | D |
|---|---|---|---|---|---|
| LB16CV | 16mm | 17 | 22 | 45 | 8 |

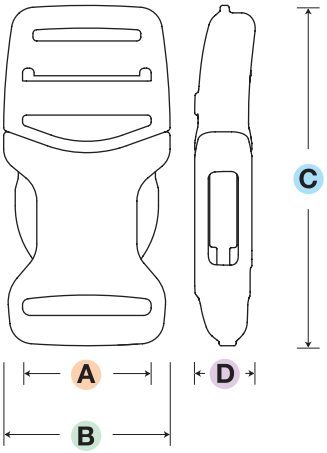

Sharpn' Loc®

## LB-YC | Side-Release 旁開扣 | POM

**Single Adjuster**

- The large angular center cut allows for a smooth insertion of the plug and for easy removal of debris including dirt or snow.
- Smooth release feature.
- Compact and light weight.
- Various color combinations available.

- 母扣導角加大開口設計，公 / 母扣滑順好開啟。
- 且汗垢不易卡住。
- 輕量化設計。
- 可各種顏色組合。

| CODE | SIZE | A | B | C | D |
|---|---|---|---|---|---|
| LB16YC | 16mm | 17 | 22 | 38 | 8 |
| LB20YC | 20mm | 20 | 26 | 42 | 9 |
| LB25YC | 25mm | 26 | 32 | 50 | 11 |
| LB38YC | 38mm | 38 | 46 | 55 | 11 |

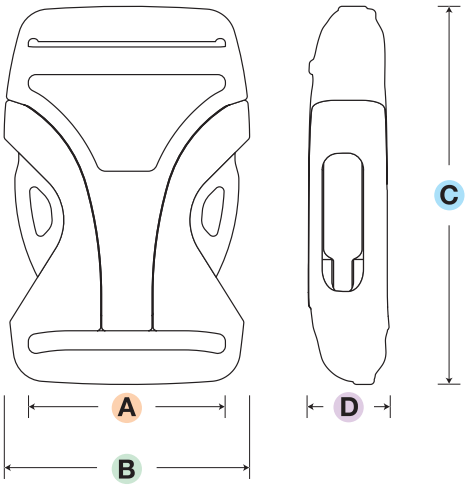


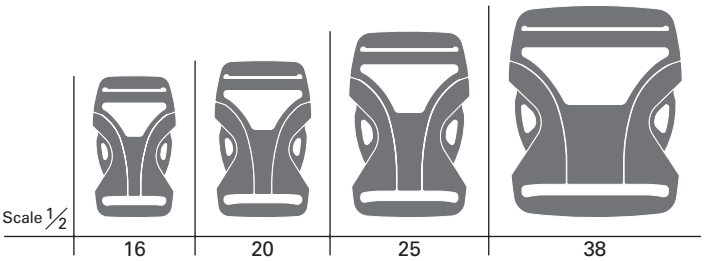


Sharpn' Loc®

## LB-YCD | Side-Release 旁開扣 | POM

**Dual Adjuster**

- The large angular center cut allows for a smooth insertion of the plug and for easy removal of debris including dirt or snow.
- Smooth release feature.
- Compact and light weight.
- Various color combinations available.
- Dual adjustment.

- 母扣導角加大開口設計，公 / 母扣滑順好開啟。
- 且汗垢不易卡住。
- 輕量化設計。
- 可各種顏色組合。
- 兩側皆可調整織帶。

| CODE | SIZE | A | B | C | D |
|---|---|---|---|---|---|
| LB20YCD | 20mm | 21 | 26 | 46 | 9 |
| LB25YCD | 25mm | 26 | 32 | 54 | 10 |
| LB38YCD | 38mm | 39 | 46 | 61 | 11 |

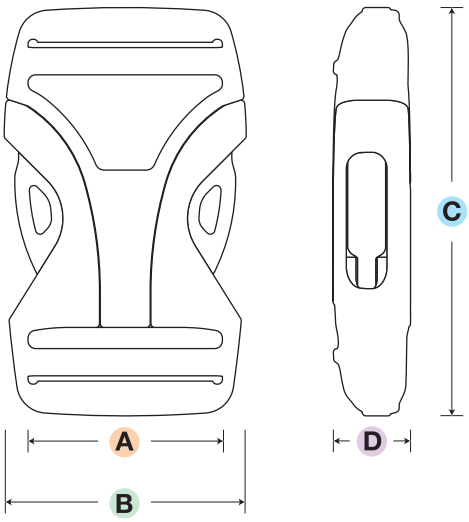


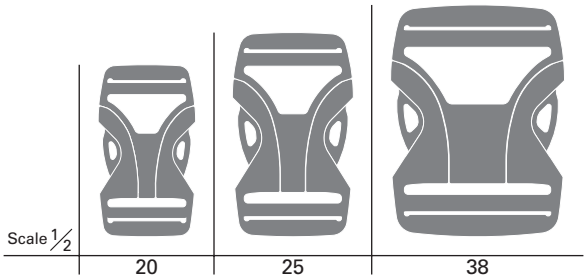

Sharpn' Loc®

## LB-YCS | Side-Release 旁開扣 | POM

**Non Adjustable**

- The large angular center cut allows for a smooth insertion of the plug and for easy removal of debris including dirt or snow.
- Smooth release feature.
- Compact and light weight.
- Various color combinations available.
- Single bar, non-adjustment.

- 母扣導角加大開口設計，公 / 母扣滑順好開啟。
- 且汗垢不易卡住。
- 輕量化設計。
- 可各種顏色組合。
- 公母扣織帶免調整設計。

| CODE | SIZE | A | B | C | D |
|---|---|---|---|---|---|
| LB25YCS | 25mm | 26 | 32 | 45 | 11 |
| LB38YCS | 38mm | 38 | 46 | 50 | 11 |

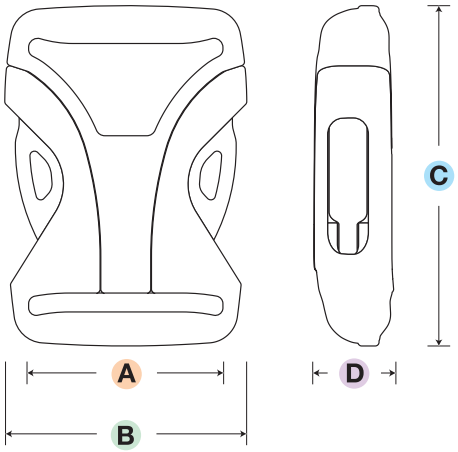


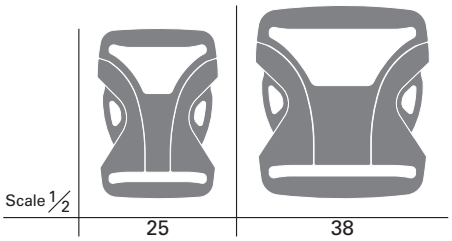


Sharpn' Loc®

## LB-YCT | Side-Release 旁開扣 | POM

**Single Adjuster**

- The large angular center cut allows for a smooth insertion of the plug and for easy removal of debris including dirt or snow.
- Smooth release feature.
- Compact and light weight.
- Various color combinations available.
- 20mm side release buckle with a 10mm strap divider.

- 母扣導角加大開口設計，公 / 母扣滑順好開啟。
- 且汗垢不易卡住。
- 輕量化設計。
- 可各種顏色組合。
- 單邊 20mm 織帶寬，搭配另一端分別兩條 10mm 織帶組合。

| CODE | SIZE | A | B | C | D | E |
|---|---|---|---|---|---|---|
| LB20YCT | 20mm | 21 | 29 | 49 | 9 | 11 |

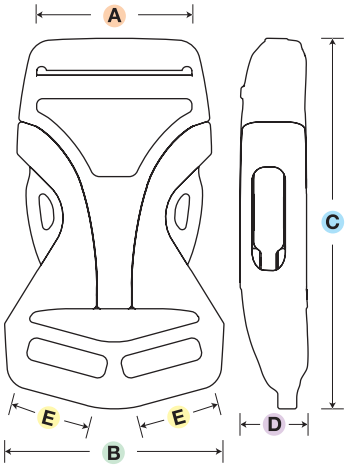


Sharpn' Loc®

## LM-YC | Side-Release 旁開扣 | POM

**Single Adjuster** **Pouch Clip**

- The large angular center cut allows for a smooth insertion of the plug and for easy removal of debris including dirt or snow.
- Smooth release feature.
- Compact and light weight.
- Various color combinations available.
- Pouch-Clip.

- 母扣導角加大開口設計，公 / 母扣滑順好開啟。
- 且汗垢不易卡住。
- 輕量化設計。
- 可各種顏色組合。
- 旁開壓鎖扣。

| CODE | SIZE | A | B | C | D |
|---|---|---|---|---|---|
| LM20YC | 20mm | 20 | 26 | 41 | 15 |

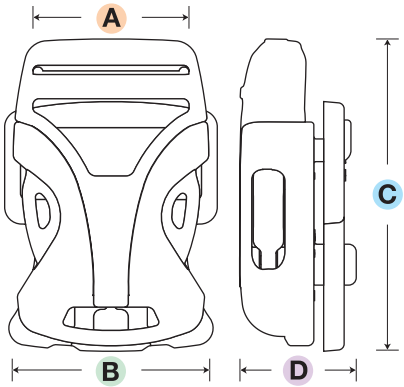

LM-YC Plate

## 2 Way Release

### LB-TS | Side-Release 旁開扣 | POM

**Single Adjuster**

- Low profile, light weight and compact.
- 2-way release design allows for either a PUSH or PULL operation.

- 輕薄俐落外型。
- 可推 / 拉，兩向開啟設計。

| CODE | SIZE | A | B | C | D |
|---|---|---|---|---|---|
| LB10TS | 10mm | 11 | 20 | 31 | 7 |
| LB16TS | 16mm | 17 | 24 | 36 | 8 |
| LB20TS | 20mm | 21 | 28 | 39 | 8 |
| LB25TS | 25mm | 26 | 33 | 44 | 9 |
| LB38TS | 38mm | 39 | 45 | 54 | 10 |

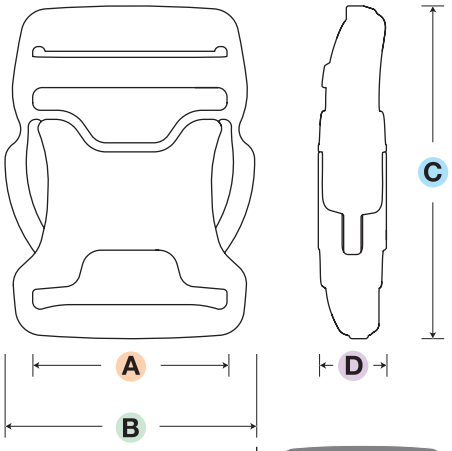


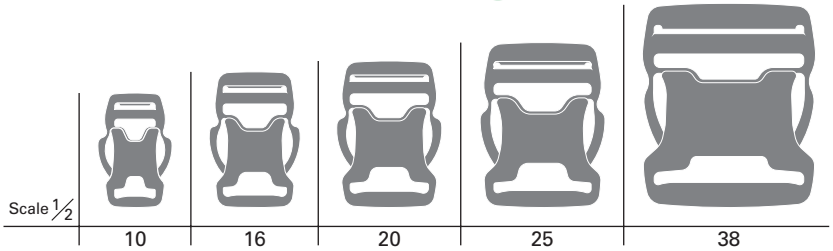


**2-way release buckle** Easy to release especlally with small size buckle! Even with bulky gloves on!

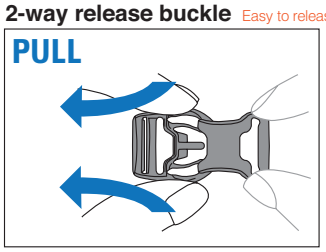


Because of the large side levers and the unique plug shape, you can pull and unbuckle with ease.

&

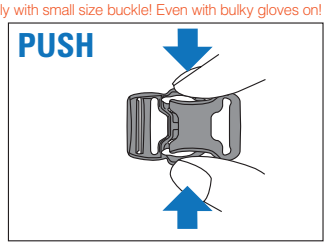


The plug can be released with just a little push.

## 2 Way Release

### LB-TSD | Side-Release 旁開扣 | POM

**Dual Adjuster**

- Low profile, light weight and compact.
- 2-way release design allows for either a PUSH or PULL operation.
- Dual adjustment.

- 輕薄俐落外型。
- 可推 / 拉，兩向開啟設計。
- 兩側皆可調整織帶。

| CODE | SIZE | A | B | C | D |
|---|---|---|---|---|---|
| LB20TSD | 20mm | 21 | 28 | 44 | 8 |
| LB25TSD | 25mm | 26 | 33 | 51 | 9 |
| LB30TSD | 30mm | 31 | 38 | 56 | 10 |
| LB38TSD | 38mm | 39 | 45 | 61 | 10 |

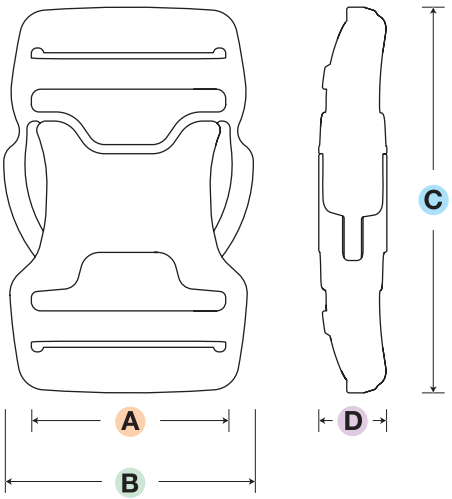


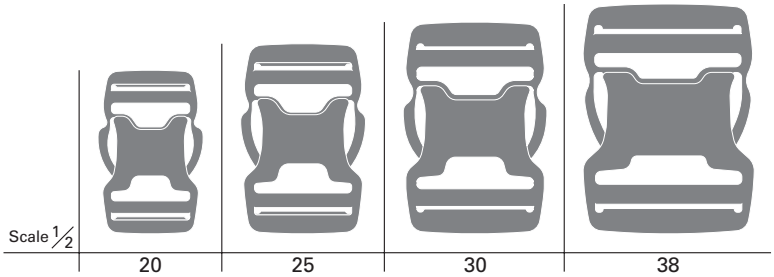

## 2 Way Release

# LM-TS

**Side-Release** 旁開扣

**POM**

**Single Adjuster** **Pouch Clip**

- Low profile, light weight and compact.
- 2-way release design allows for either a PUSH or PULL operation.
- Pouch-Clip.

- 輕薄俐落外型。
- 可推 / 拉，兩向開啟設計。
- 旁開壓鎖扣。

| CODE | SIZE | A | B | C | D |
|---|---|---|---|---|---|
| LM20TS | 20mm | 21 | 28 | 34 | 13 |

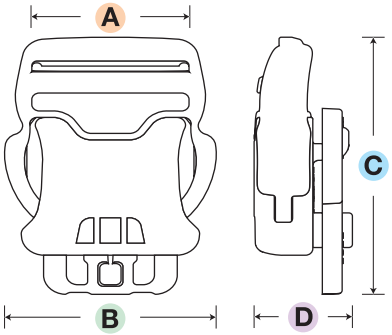

LM-TS Plate

## Flapped Buckle

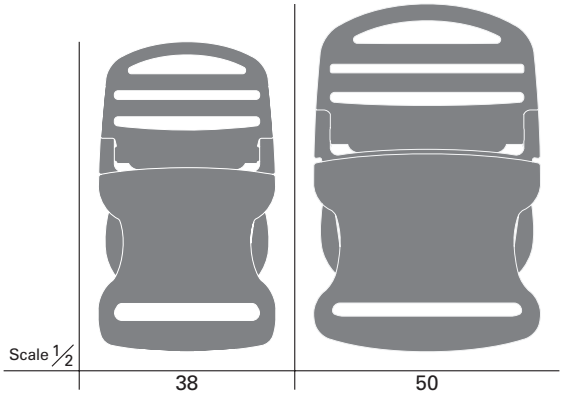


## LB-RT

Side-Release 旁開扣

POM

**Single Adjuster** **Break Resistant**

- One handed tape operation to tighten or loosen.
- Locking design greatly reduces webbing slippage.

- 調整織帶鬆緊，單手操作設計。
- 卡鎖設計，避免織帶滑動。

| CODE | SIZE | A | B | C | D |
|---|---|---|---|---|---|
| LB38RT | 38mm | 38 | 47 | 82 | 13 |
| LB50RT | 50mm | 50 | 60 | 92 | 15 |

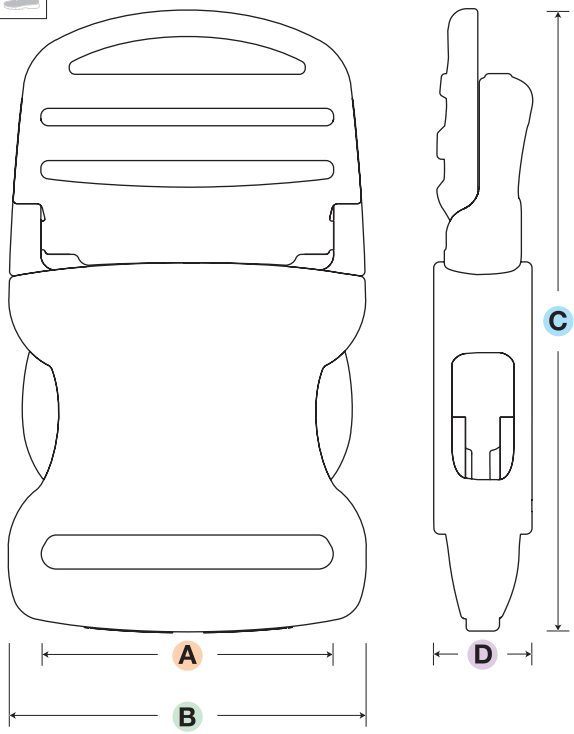


## 2 ways to use

### A type: Secure and Locked

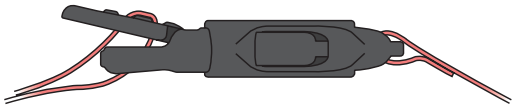

**How to use** ▶ **To loosen the strap, raise the flap and pull the buckle.**

- Webbing stays securely locked in place until the flap is released.

### B type: Quick Releasing

**How to use** ▶ **To loosen the strap, simply angle the buckle.**

- Can be used with most webbing, regardless of thickness.

## UL Approved

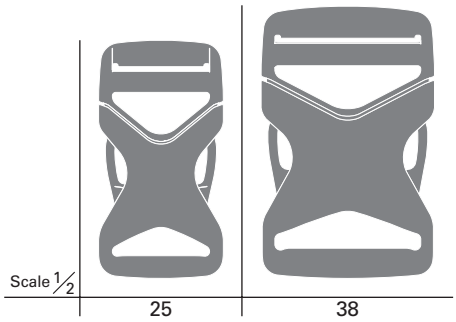


### LB-MP | Side-Release 旁開扣 | POM

**Single Adjuster** **Break Resistant**

- UL Certified (Type2, 2F, 3, 3F, 4H, 5H, 5R and 5WV).
- Ideal for use in personal flotation devices (PFD).
- Streamline, compact and light weight design .

- 通過 UL 規格 (Type2, 2F, 3, 3F, 4H, 5H, 5R, 5WV) 之認證。
- 適合 PFD(Personal Flotation Device) 之用途。
- 外觀流線設計。
- 輕薄俐落外型。
- 輕量化設計。

| CODE | SIZE | A | B | C | D |
|---|---|---|---|---|---|
| LB25MP | 25mm | 26 | 33 | 63 | 12 |
| LB38MP | 38mm | 39 | 46 | 72 | 13 |

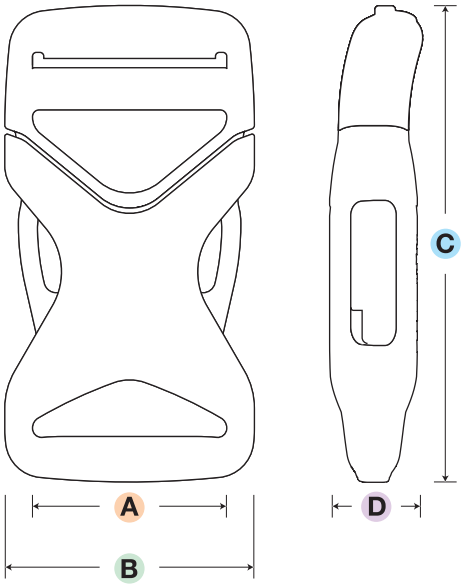


## Rotatable

### LB-EQ | Side-Release 旁開扣 | POM

**Single Adjuster**

- Quick release, single handed operation and horizontal engagement.
- Ideal for use in messenger bags with cross strap and/or front closure application.

- 公母扣垂直開啟設計：可單手操作並快速開啟。
- 適用於斜背包 / 郵差包及一般前開式設計的袋類使用。

| CODE | SIZE | A | B | C | D |
|---|---|---|---|---|---|
| LB20EQ | 20mm | 21 | 36 | 53 | 15 |

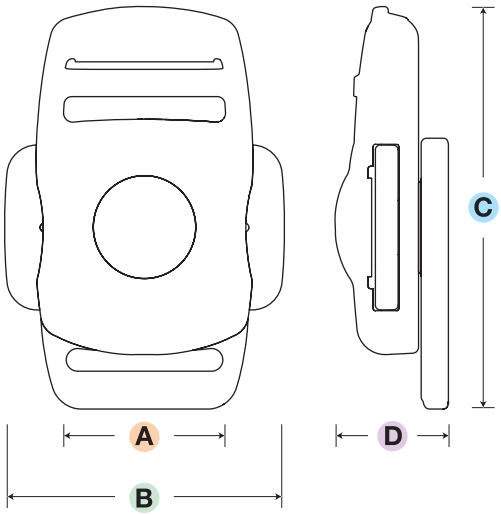


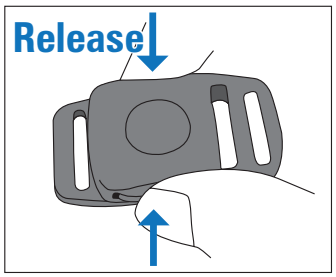


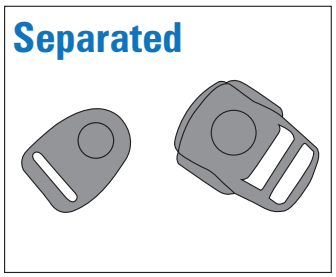


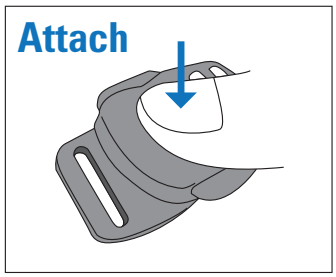

## Ultra-Lightweight

### LB-LW | Side-Release 旁開扣 | POM

**Single Adjuster** **Break Resistant**

- Ultra-Lightweight.
- Flexible socket provides durability and resistance to breakage.
- Smooth insertion and release feature.

- YKK 超輕量化扣具，兼具強度與輕量特點。
- 母扣獨特造型設計確保耐久性及強度需求。
- 公扣橫桿設計，預防公扣斷裂。
- YKK 獨特公母扣卡榫專利扣合設計。

| CODE | SIZE | A | B | C | D |
|---|---|---|---|---|---|
| LB16LW | 16mm | 17 | 22 | 39 | 8 |
| LB20LW | 20mm | 21 | 26 | 43 | 9 |
| LB25LW | 25mm | 26 | 32 | 52 | 10 |
| LB38LW | 38mm | 39 | 46 | 59 | 11 |

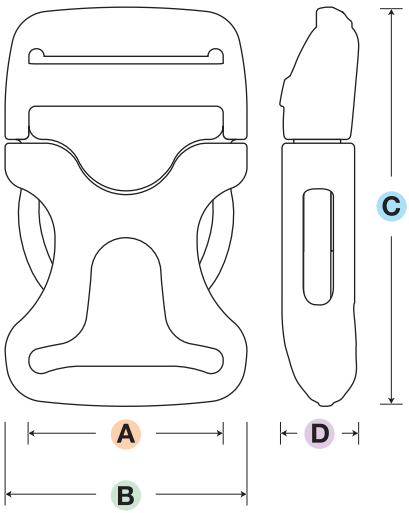


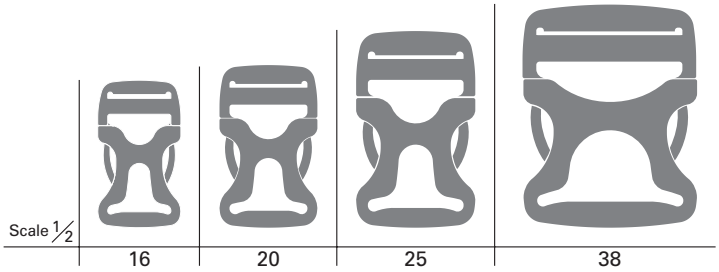


## Ultra-Lightweight

### LB-LWD | Side-Release 旁開扣 | POM

**Dual Adjuster** **Break Resistant**

- Ultra-Lightweight.
- Flexible socket provides durability and resistance to breakage.
- Smooth insertion and release feature.
- Dual adjustment.

- YKK 超輕量化扣具，兼具強度與輕量特點。
- 母扣獨特造型設計確保耐久性及強度需求。
- 公扣橫桿設計，預防公扣斷裂。
- YKK 獨特公母扣卡榫專利扣合設計。
- 兩側皆可調整織帶。

| CODE | SIZE | A | B | C | D |
|---|---|---|---|---|---|
| LB20LWD | 20mm | 21 | 26 | 50 | 9 |
| LB38LWD | 38mm | 39 | 46 | 69 | 11 |

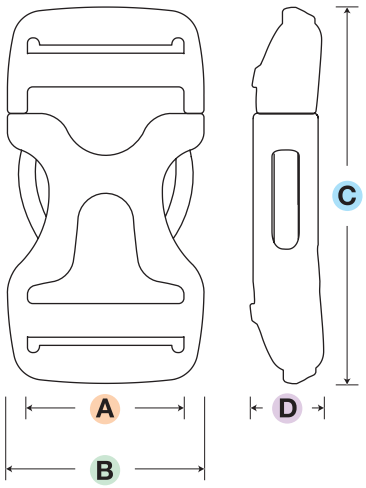


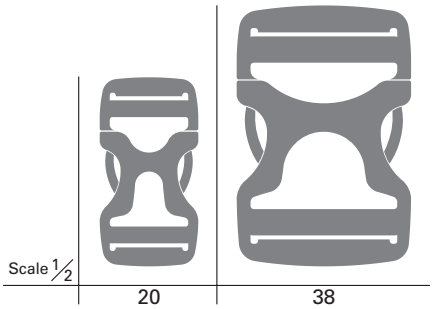

## Ultra-Lightweight

### LB-LWS | Side-Release 旁開扣 | POM

**Non Adjustable** **Break Resistant**

- Ultra-Lightweight.
- Flexible socket provides durability and resistance to breakage.
- Smooth insertion and release feature.
- Single bar, non-adjustment.

- YKK 超輕量化扣具，兼具強度與輕量特點。
- 母扣獨特造型設計確保耐久性及強度需求。
- 公扣橫桿設計，預防公扣斷裂。
- YKK 獨特公母扣卡榫專利扣合設計。
- 公母扣織帶免調整設計。

| CODE | SIZE | A | B | C | D |
|---|---|---|---|---|---|
| LB38LWS | 38mm | 39 | 46 | 51 | 11 |

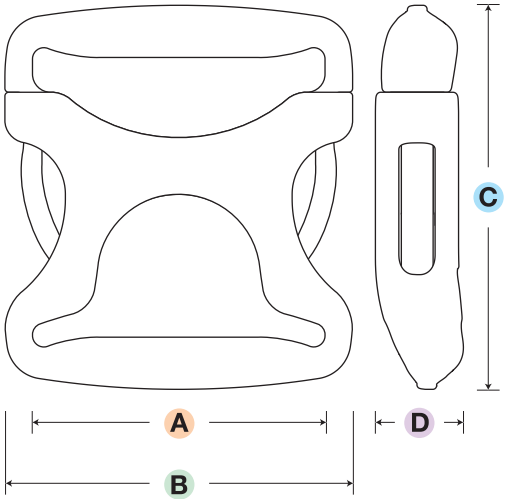


## Ultra-Lightweight

New

### LB-LWH | Side-Release 旁開扣 | POM

**Single Adjuster** **Break Resistant**

- Ultra-lightweight buckle for using with cords.
- Flexoble socket provides durability and resistance to breakage.
- Smooth insertion and release feature.
- Can use family products of Ultra-lightweight (LB-LW) series.

- 極輕量化且可穿繩孔設計扣具。
- 母扣獨特造型設計確保耐久性及強度需求。
- 公扣橫桿設計，預防公扣斷裂。
- 可搭配 LB-LW 系列使用。

| CODE | SIZE | A | B | C | D | E |
|---|---|---|---|---|---|---|
| LB16LWH | 16mm | 17 | 22 | 41 | 8 | 5 |

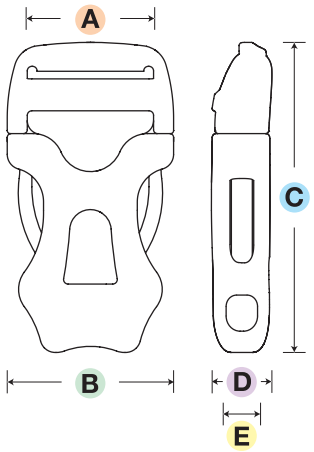


## Ultra-Lightweight

### LM-LW | Side-Release 旁開扣 | POM

**Single Adjuster** **Pouch Clip** **Break Resistant**

- Ultra-Lightweight.
- Flexible socket provides durability and resistance to breakage.
- Smooth insertion and release feature.
- Pouch-Clip.

- YKK 超輕量化扣具，兼具強度與輕量特點。
- 母扣獨特造型設計確保耐久性及強度需求。
- 公扣橫桿設計，預防公扣斷裂。
- YKK 獨特公母扣卡榫專利扣合設計。
- 旁開壓鎖扣。

| CODE | SIZE | A | B | C | D |
|---|---|---|---|---|---|
| LM20LW | 20mm | 21 | 26 | 36 | 14 |

LM-LW Plate

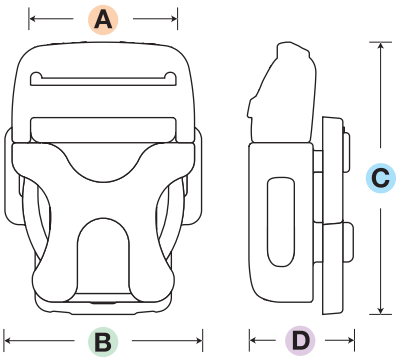

## LB-MV | Side-Release 旁開扣 | POM

**Single Adjuster** **Break Resistant**

- Connecting arm reinforcement provides break resistance.
- Easy adjustment and reduced web slippage.

- 更輕量更堅固設計。
- 無縫隙接合。

| CODE | SIZE | A | B | C | D |
|---|---|---|---|---|---|
| LB16MV | 16mm | 17 | 23 | 44 | 8 |
| LB20MV | 20mm | 21 | 27 | 50 | 10 |
| LB25MV | 25mm | 26 | 33 | 61 | 12 |
| LB38MV | 38mm | 39 | 46 | 69 | 13 |
| LB50MV | 50mm | 51 | 60 | 80 | 15 |

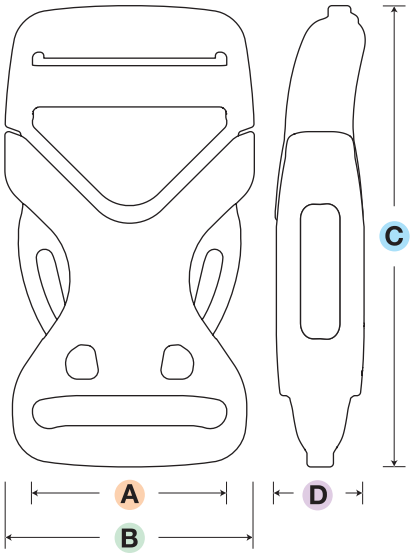


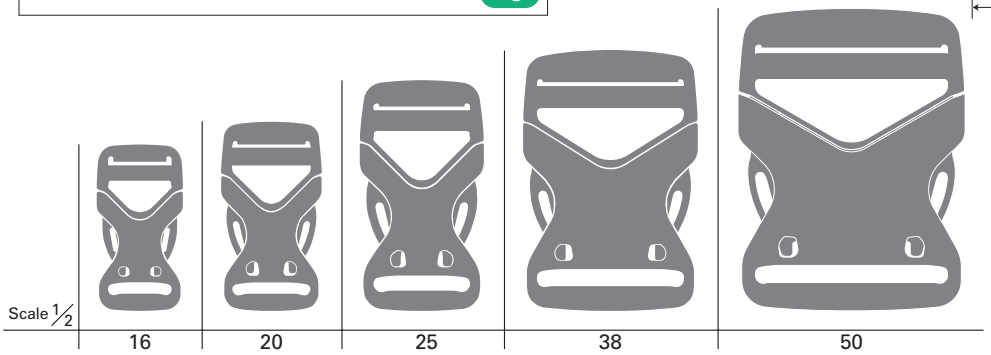

LB25MV Plug

## LB-MVD | Side-Release 旁開扣 | POM

**Dual Adjuster** **Break Resistant**

- Connecting arm reinforcement provides break resistance.
- Easy adjustment and reduced web slippage.
- Dual adjustment.

- 更輕量更堅固設計。
- 無縫隙接合。
- 兩側皆可調整織帶。

| CODE | SIZE | A | B | C | D |
|---|---|---|---|---|---|
| LB16MVD | 16mm | 17 | 23 | 49 | 8 |
| LB20MVD | 20mm | 21 | 27 | 56 | 10 |
| LB25MVD | 25mm | 26 | 33 | 69 | 12 |
| LB38MVD | 38mm | 39 | 46 | 77 | 13 |
| LB50MVD | 50mm | 51 | 61 | 91 | 15 |

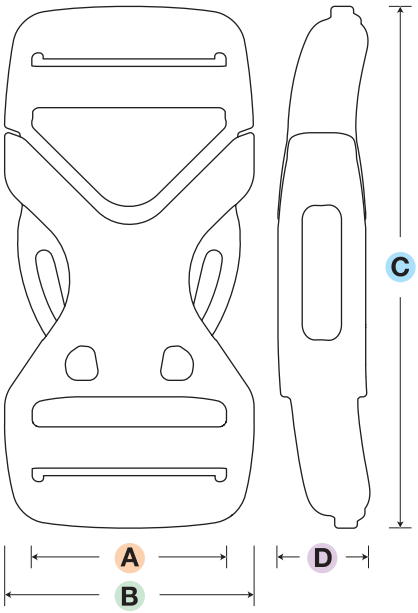


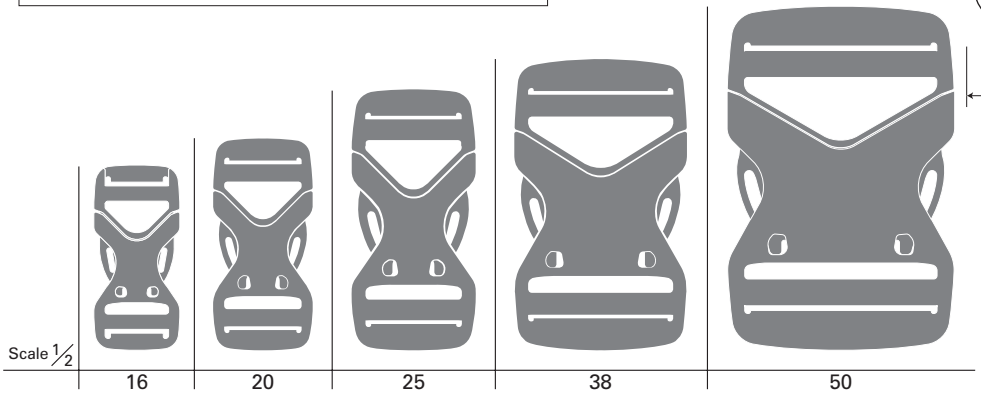

## LB-MVS

**Side-Release** 旁開扣

**POM**

**Non Adjustable** **Break Resistant**

- Connecting arm reinforcement provides break resistance.
- Easy adjustment and reduced web slippage.
- Single bar, non-adjustment.

- 更輕量更堅固設計。
- 無縫隙接合。
- 公母扣織帶免調整設計。

| CODE | SIZE | A | B | C | D |
|---|---|---|---|---|---|
| LB38MVS | 38mm | 39 | 46 | 60 | 13 |

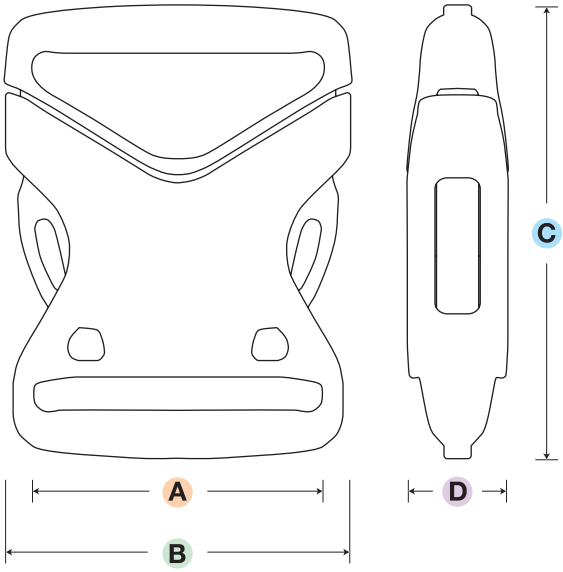

LB16MVW

## LB-MVW | Side-Release 旁開扣 | POM

**Single Adjuster** **Twin size** **Break Resistant**

- Connecting arm reinforcement provides break resistance.
- Easy adjustment and reduced web slippage.
- Combine two different tape widths (Plug:10mm and Socket:16mm).

- 更輕量更堅固設計。
- 無縫隙接合。
- 公母扣上下分別使用 2 種不同織帶 (10mm/16mm)。

| CODE | SIZE | A | B | C | D | E |
|---|---|---|---|---|---|---|
| LB16MVW | 16mm | 17 | 23 | 43 | 8 | 11 |

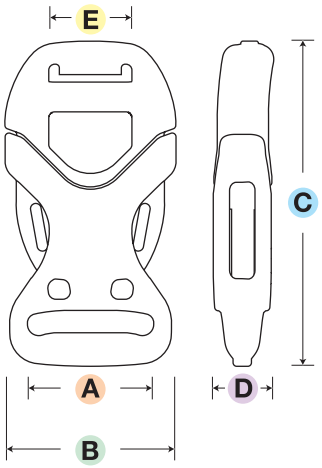

LM20MV Plate

## LM-MV | Side-Release 旁開扣 | POM

**Single Adjuster** **Pouch Clip** **Break Resistant**

- Connecting arm reinforcement provides break resistance.
- Easy adjustment and reduced web slippage.
- Pouch-Clip.

- 更輕量更堅固設計。
- 無縫隙接合。
- 旁開壓鎖扣。

| CODE | SIZE | A | B | C | D |
|---|---|---|---|---|---|
| LM20MV | 20mm | 21 | 27 | 43 | 17 |

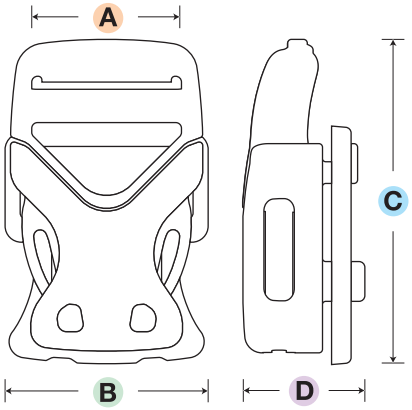

## LB-HE

Side-Release 旁開扣

POM

**Single Adjuster**

- Double leg design reduces leg breakage.
- 強化公扣前端設計，防止斷裂。

| CODE | SIZE | A | B | C | D |
|---|---|---|---|---|---|
| LB20HE | 20mm | 21 | 26 | 44 | 9 |
| LB25HE | 25mm | 26 | 33 | 55 | 10 |
| LB38HE | 38mm | 39 | 46 | 62 | 11 |

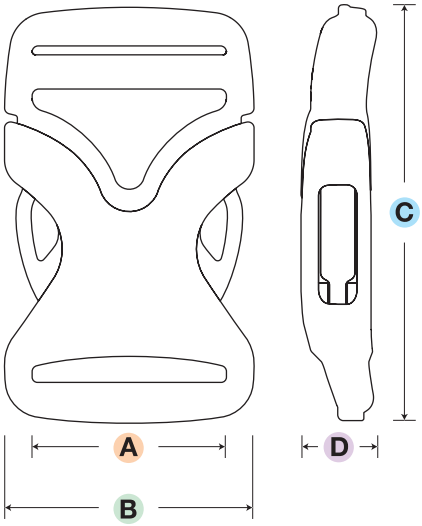


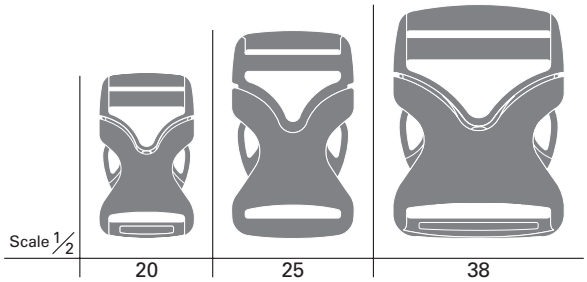

## LB-HED

Side-Release 旁開扣

POM

**Dual Adjuster**

- Double leg design reduces leg breakage.
- Dual adjustment.
- 強化公扣前端設計，防止斷裂。
- 雙調整織帶。
- 兩側皆可調整織帶。

| CODE | SIZE | A | B | C | D |
|---|---|---|---|---|---|
| LB38HED | 38mm | 39 | 46 | 71 | 11 |

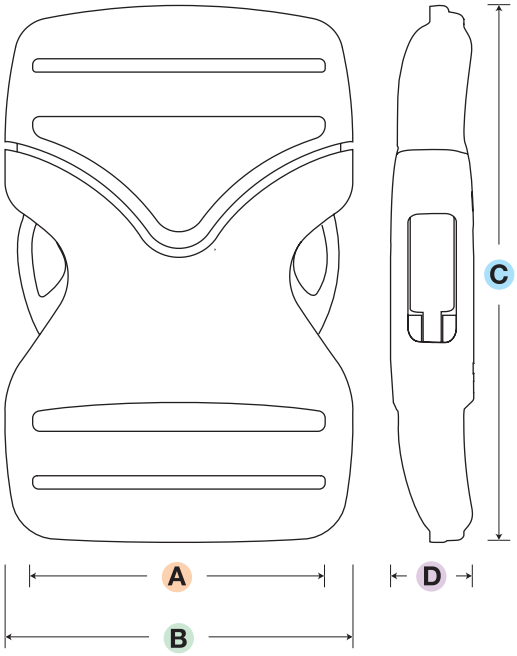

## Lightweight

Logo

## LB-LV | Side-Release 旁開扣 | POM

### Single Adjuster

- Lightweight design.
- V shape design allows for smooth and easy plug insertion.
- Easy adjustment and reduced web slippage.

- 超輕量化的設計理念。
- 新款“V”造型，使開合更加滑順。

| CODE | SIZE | A | B | C | D |
|---|---|---|---|---|---|
| LB16LV | 16mm | 17 | 21 | 40 | 8 |
| LB20LV | 20mm | 21 | 26 | 46 | 8 |
| LB25LV | 25mm | 26 | 33 | 56 | 9 |
| LB38LV | 38mm | 39 | 46 | 61 | 11 |
| LB50LV | 50mm | 51 | 59 | 66 | 13 |

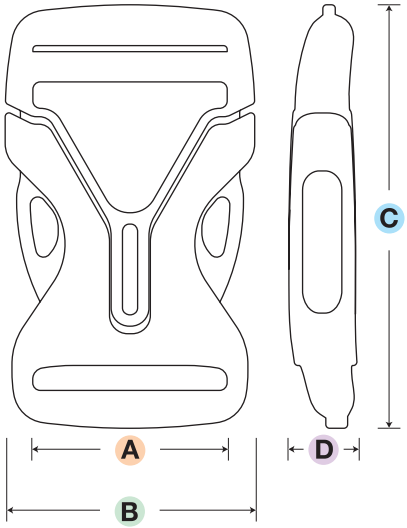


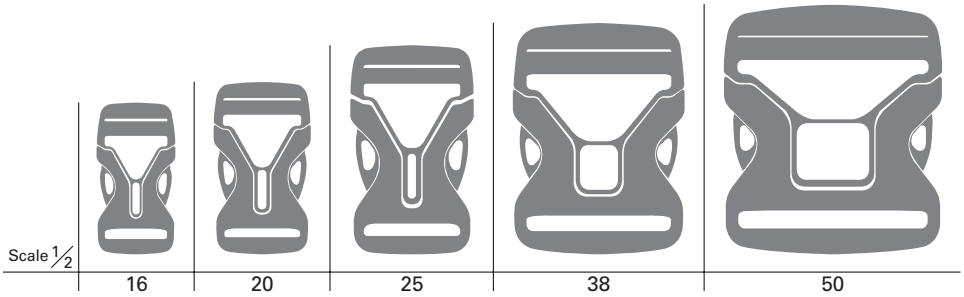


## Lightweight

Logo

## LB-LVD | Side-Release 旁開扣 | POM

### Dual Adjuster

- Lightweight design.
- V shape design allows for smooth and easy plug insertion.
- Easy adjustment and reduced web slippage.
- Dual adjustment.

- 超輕量化的設計理念。
- 新款“V”造型，使開合更加滑順。
- 兩側皆可調整織帶。

| CODE | SIZE | A | B | C | D |
|---|---|---|---|---|---|
| LB16LVD | 16mm | 17 | 21 | 44 | 8 |
| LB20LVD | 20mm | 21 | 26 | 50 | 8 |
| LB25LVD | 25mm | 26 | 33 | 61 | 9 |
| LB38LVD | 38mm | 39 | 46 | 68 | 11 |
| LB50LVD | 50mm | 51 | 59 | 73 | 13 |

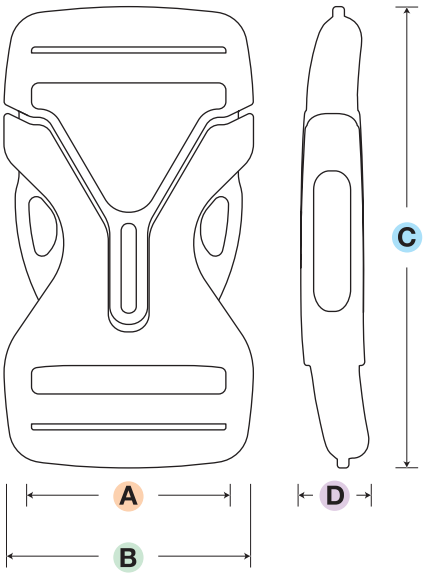


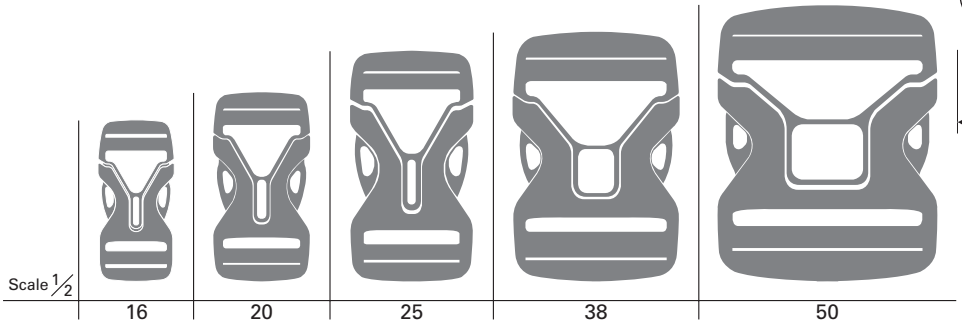

## Lightweight

### LB-LVS | Side-Release 旁開扣 | POM

**Non Adjustable**

- Lightweight design.
- V shape design allows for smooth and easy plug insertion.
- Easy adjustment and reduced web slippage.
- Single bar, non-adjustment.

- 超輕量化的設計理念。
- 新款“V”造型，使開合更加滑順。
- 公母扣織帶免調整設計。

| CODE | SIZE | A | B | C | D |
|---|---|---|---|---|---|
| LB38LVS | 38mm | 39 | 46 | 53 | 11 |

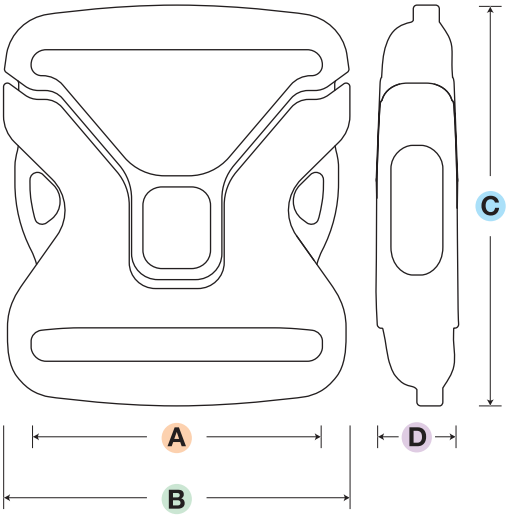


## Lightweight

LM20LV Plate

### LM-LV | Side-Release 旁開扣 | POM

**Single Adjuster** **Pouch Clip**

- Lightweight design.
- V shape design allows for smooth and easy plug insertion.
- Easy adjustment and reduced web slippage.
- Pouch-Clip.

- 超輕量化的設計理念。
- 新款“V”造型，使開合更加滑順。
- 旁開壓鎖扣。

| CODE | SIZE | A | B | C | D |
|---|---|---|---|---|---|
| LM20LV | 20mm | 21 | 26 | 40 | 15 |

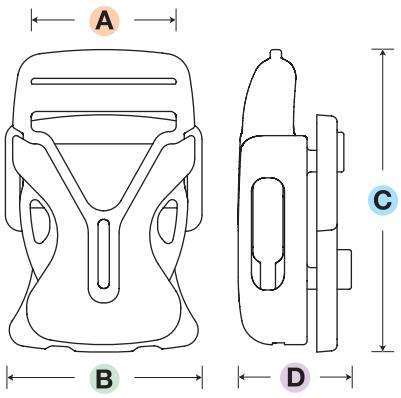

SHOCKONLOC®

## LB-WG | Side-Release 旁開扣 | T-POM

**Single Adjuster**

- High-grade polyacetal combined with YKK's unique design significantly increases strength and impact resistance.
- SHOCKONLOC® resists water absorption often caused by high humidity.
- Product can endure extreme temperatures such as cold mountain top and / or desert heat.
- Impact absorbing design.
- Surface finish and material differ from LB-WG1 series.

*Please do not combine with LB-WG1 series.

- 使用特殊強化的 T-POM 材質，增加耐衝擊性。
- 禁得起酷寒及酷熱等惡劣環境的考驗。

| CODE | SIZE | A | B | C | D |
|---|---|---|---|---|---|
| LB20WG | 20mm | 21 | 29 | 49 | 10 |
| LB25WG | 25mm | 25 | 36 | 59 | 13 |
| LB38WG | 38mm | 38 | 47 | 68 | 15 |
| LB50WG | 50mm | 50 | 61 | 76 | 16 |

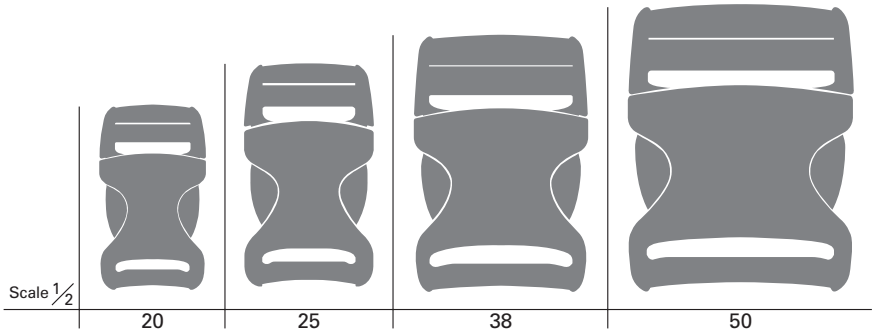


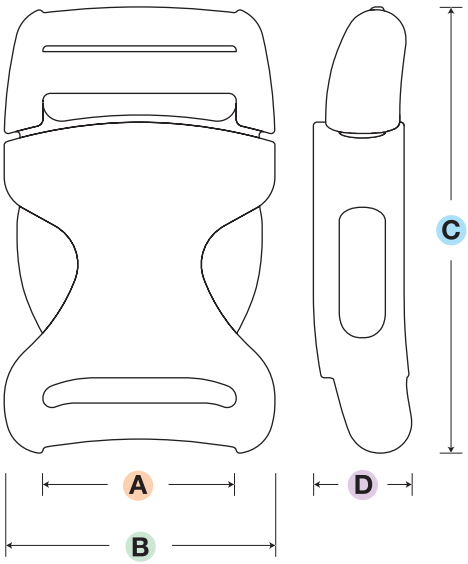

SHOCKONLOC®

## LB-WGD | Side-Release 旁開扣 | T-POM

**Dual Adjuster**

- High-grade polyacetal combined with YKK's unique design significantly increases strength and impact resistance.
- SHOCKONLOC® resists water absorption often caused by high humidity.
- Product can endure extreme temperatures such as cold mountain top and / or desert heat.
- Impact absorbing design.
- Surface finish and material differ from LB-WG1 series.
- Dual adjustment.

*Please do not combine with LB-WG1 series.

- 使用特殊強化的 T-POM 材質，增加耐衝擊性。
- 禁得起酷寒及酷熱等惡劣環境的考驗。
- 兩側皆可調整織帶。

| CODE | SIZE | A | B | C | D |
|---|---|---|---|---|---|
| LB20WGD | 20mm | 21 | 29 | 54 | 10 |
| LB25WGD | 25mm | 25 | 36 | 66 | 13 |
| LB38WGD | 38mm | 38 | 47 | 75 | 15 |
| LB50WGD | 50mm | 50 | 61 | 84 | 16 |

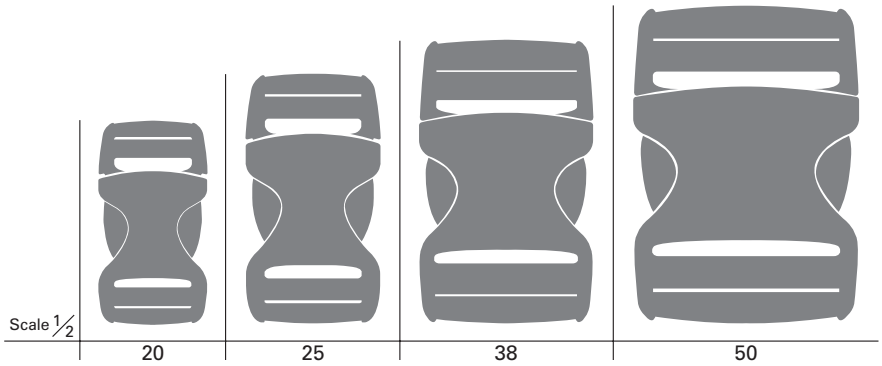

SHOCKONLOC®

## LB-WGS | Side-Release 旁開扣 | T-POM

**Non Adjustable** **Break Resistant**

- High-grade polyacetal combined with YKK's unique design significantly increases strength and impact resistance.
- SHOCKONLOC® resists water absorption often caused by high humidity.
- Product can endure extreme temperatures such as cold mountain top and / or desert heat.
- Impact absorbing design.
- Surface finish and material differ from LB-WG1 series.
- Single bar, non-adjustment.

*Please do not combine with LB-WG1 series.

- 使用特殊強化的 T-POM 材質，增加耐衝擊性。
- 禁得起酷寒及酷熱等惡劣環境的考驗。
- 公母扣織帶免調整設計。

| CODE | SIZE | A | B | C | D |
|---|---|---|---|---|---|
| LB38WGS | 38mm | 39 | 47 | 61 | 15 |

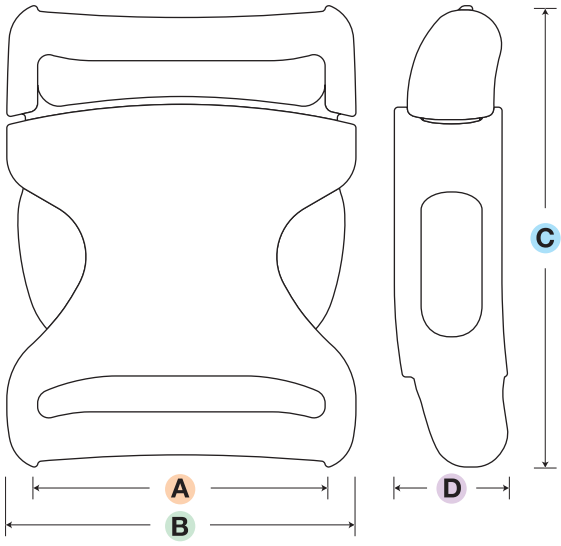

## LB-WG1 | Side-Release 旁開扣 | POM

**Single Adjuster**

- Surface finish and material differ from LB-WG series.
*Please do not combine with LB-WG series.
- 材質 (POM) 及表面處理不同於 LB-WG 系列。

| CODE | SIZE | A | B | C | D |
|---|---|---|---|---|---|
| LB20WG1 | 20mm | 21 | 29 | 49 | 10 |
| LB25WG1 | 25mm | 25 | 36 | 59 | 13 |
| LB38WG1 | 38mm | 38 | 47 | 68 | 15 |

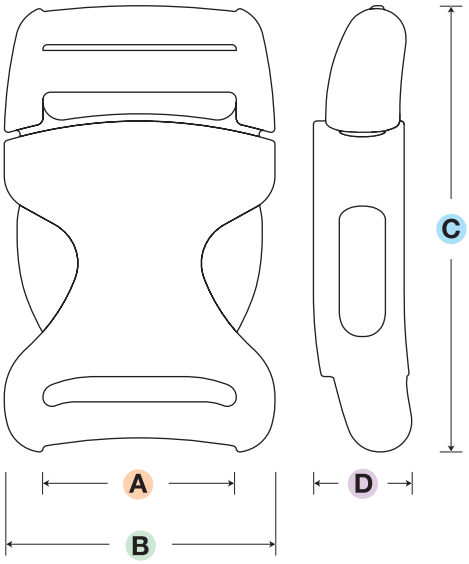


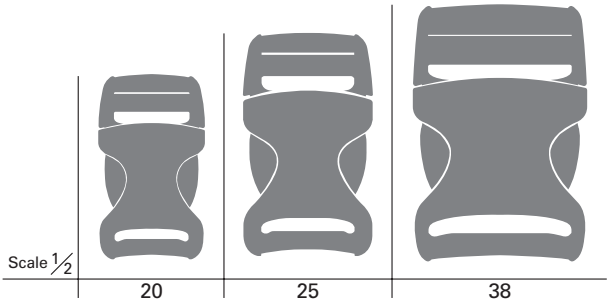

## LB-WGD1 | Side-Release 旁開扣 POM

**Dual Adjuster** **Break Resistant**

- Surface finish and material differ from LB-WG series.
- Dual adjustment.

*Please do not combine with LB-WG series.

- 材質 (POM) 及表面處理不同於 LB-WG 系列。
- 兩側皆可調整織帶。

| CODE | SIZE | A | B | C | D |
|---|---|---|---|---|---|
| LB20WGD1 | 20mm | 21 | 29 | 54 | 10 |
| LB25WGD1 | 25mm | 25 | 36 | 66 | 13 |
| LB38WGD1 | 38mm | 38 | 47 | 75 | 15 |

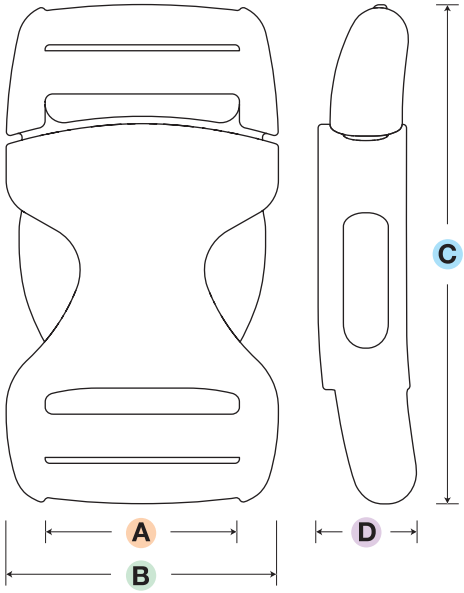


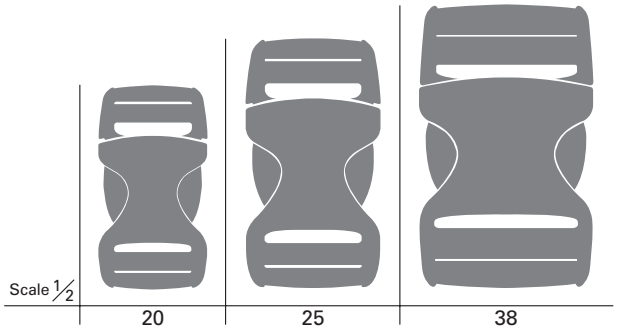

## LB-WGS1 | Side-Release 旁開扣 POM

**Non Adjustable**

- Surface finish and material differ from LB-WG series.
- Single bar, non-adjustment.

*Please do not combine with LB-WG series.

- 材質 (POM) 及表面處理不同於 LB-WG 系列。
- 公母扣織帶免調整設計。

| CODE | SIZE | A | B | C | D |
|---|---|---|---|---|---|
| LB38WGS1 | 38mm | 39 | 47 | 61 | 15 |

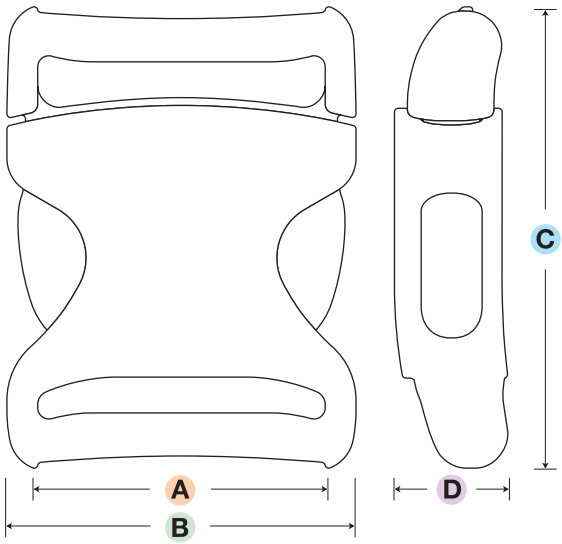

HAMMERLOC®

## LB-PT | Side-Release 旁開扣 | POM

**Single Adjuster**

- Highly streamlined design is ideal for outdoor use.
- A simple buckle with a smooth and easy release.
- An additional rib significantly increase this buckle's strength.

- 大型的開放設計。實現了更佳之操作性。
- 增加護耳設計。提昇扣合強度。

| CODE | SIZE | A | B | C | D |
|---|---|---|---|---|---|
| LB20PT | 20mm | 21 | 29 | 50 | 10 |
| LB25PT | 25mm | 26 | 35 | 60 | 12 |
| LB30PT | 30mm | 31 | 40 | 62 | 12 |
| LB38PT | 38mm | 39 | 46 | 69 | 15 |
| LB50PT | 50mm | 51 | 60 | 76 | 16 |

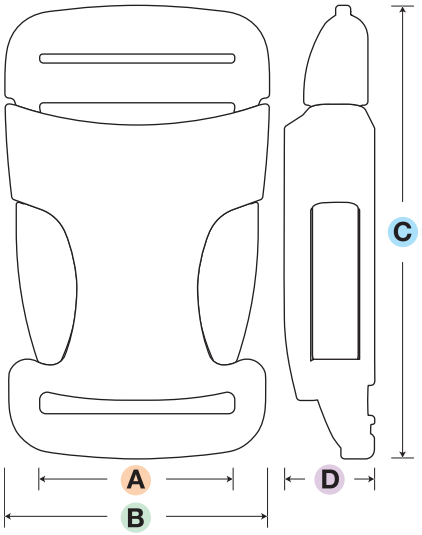


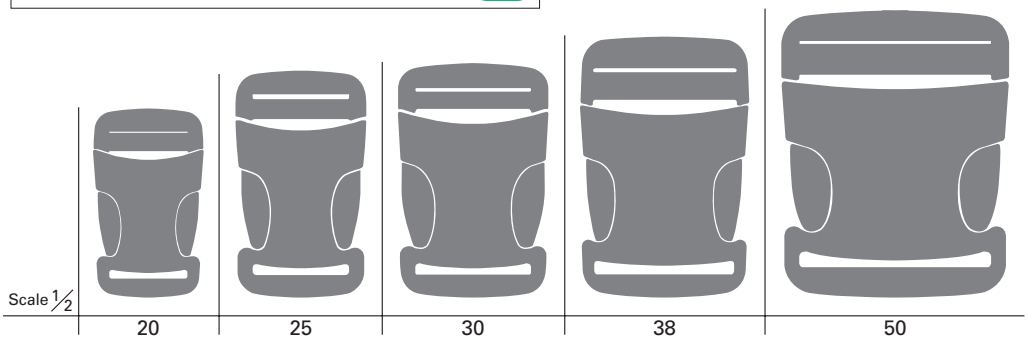


HAMMERLOC®

## LB-PTD | Side-Release 旁開扣 | POM

**Dual Adjuster**

- Highly streamlined design is ideal for outdoor use.
- A simple buckle with a smooth and easy release.
- An additional rib significantly increase this buckle's strength.
- Dual adjustment.

- 大型的開放設計。實現了更佳之操作性。
- 增加護耳設計。提昇扣合強度。
- 兩側皆可調整織帶。

| CODE | SIZE | A | B | C | D |
|---|---|---|---|---|---|
| LB20PTD | 20mm | 21 | 29 | 55 | 10 |
| LB25PTD | 25mm | 26 | 35 | 66 | 12 |
| LB38PTD | 38mm | 39 | 46 | 79 | 15 |
| LB50PTD | 50mm | 51 | 60 | 83 | 16 |

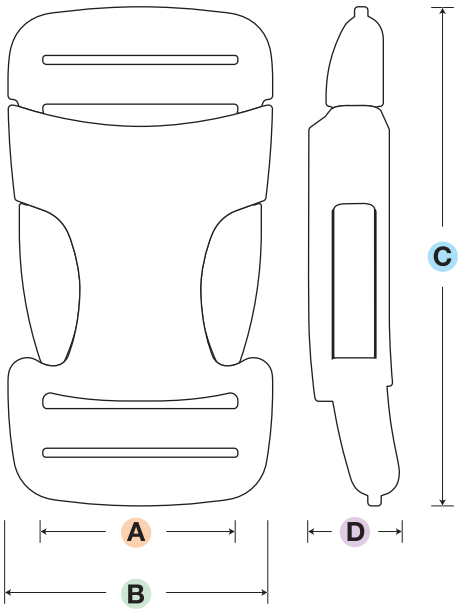


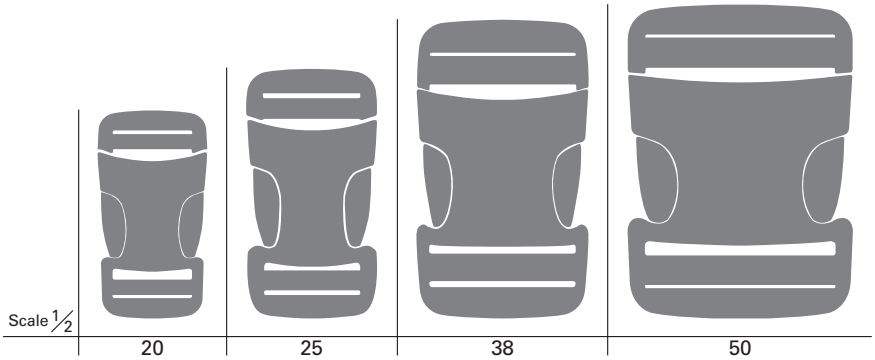

HAMMERLOC®

## LB-PTS | Side-Release 旁開扣 | POM

**Non Adjustable**

- Highly streamlined design is ideal for outdoor use.
- A simple buckle with a smooth and easy release.
- An additional rib significantly increase this buckle's strength.
- Single bar, non-adjustment.

- 大型的開敞設計。實現了更佳之操作性。
- 增加護耳設計。提昇扣合強度。
- 公母扣織帶免調整設計。

| CODE | SIZE | A | B | C | D |
|---|---|---|---|---|---|
| LB38PTS | 38mm | 39 | 46 | 60 | 15 |

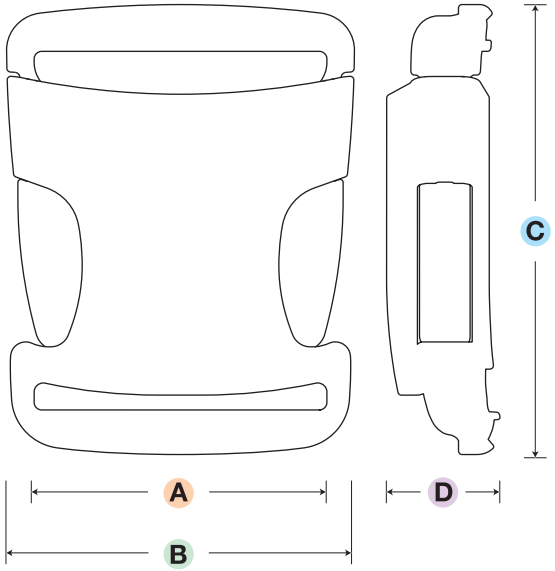


HAMMERLOC®

## LB-PTA | Side-Release 旁開扣 | POM

**Single Adjuster** **Break Resistant**

- Highly streamlined design is ideal for outdoor use.
- A simple buckle with a smooth and easy release.
- An additional rib significantly increase this buckle's strength.
- The connecting arm reinforcement prevents accidental breakage of the plug leg.

- 防止公扣斷裂。

| CODE | SIZE | A | B | C | D |
|---|---|---|---|---|---|
| LB20PTA | 20mm | 21 | 29 | 49 | 10 |
| LB38PTA | 38mm | 39 | 46 | 69 | 15 |
| LB50PTA | 50mm | 51 | 60 | 76 | 16 |

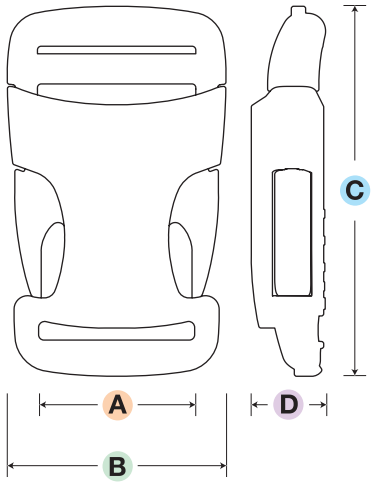

LB-PTA Plug

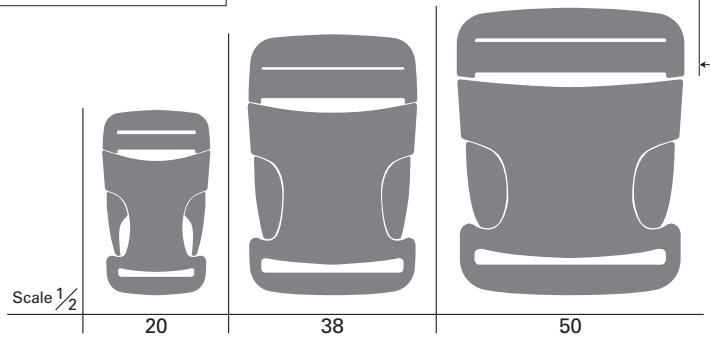

## HAMMERLOC®

### LM-PT | Side-Release 旁開扣 | POM

**Single Adjuster** **Pouch Clip**

- Highly streamlined design is ideal for outdoor use.
- A simple buckle with a smooth and easy release.
- An additional rib significantly increase this buckle's strength.
- Pouch-Clip.

- 不需機器組裝的 HAMMERLOC® buckle。
- 只要在布面上打孔，即可駕輕就熟的使用。
- 旁開壓鎖扣。

| CODE | SIZE | A | B | C | D |
|---|---|---|---|---|---|
| LM20PT | 20mm | 21 | 29 | 47 | 15 |
| LM25PT | 25mm | 26 | 35 | 57 | 17 |

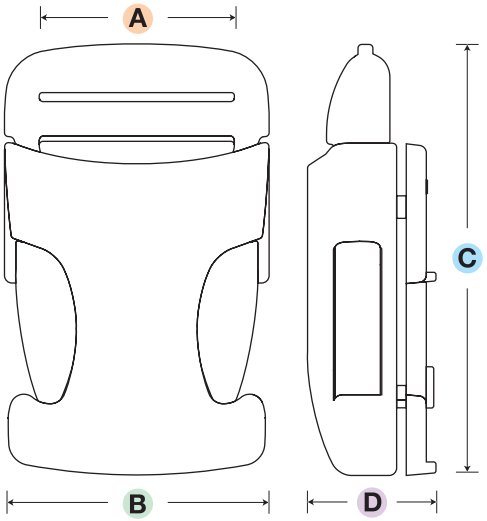


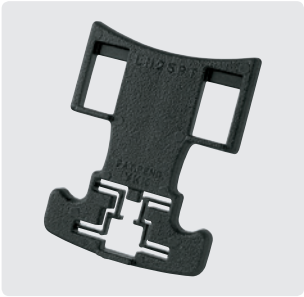

LM25PT Plate

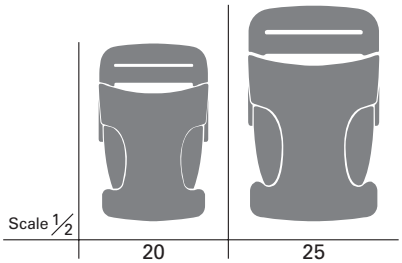


## HAMMERLOC®

### LB-PTC | Side-Release 旁開扣 | Plug: POM | Socket: PC

**Single Adjuster**

- Highly streamlined design is ideal for outdoor use.
- A simple buckle with a smooth and easy release.
- An additional rib significantly increase this buckle's strength.
- Transparent socket.

- 新款母扣透明材質的 HAMMERLOC® 系列。

| CODE | SIZE | A | B | C | D |
|---|---|---|---|---|---|
| LB20PTC | 20mm | 21 | 29 | 49 | 10 |
| LB25PTC | 25mm | 26 | 35 | 60 | 12 |

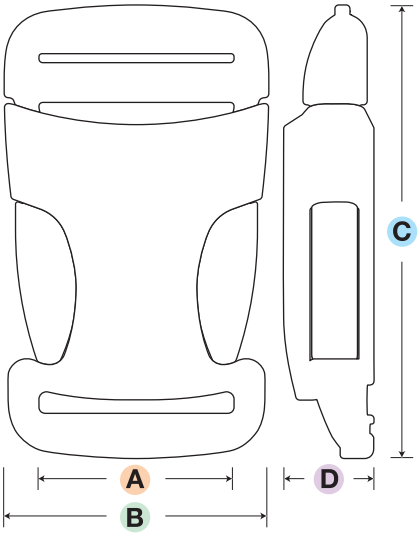


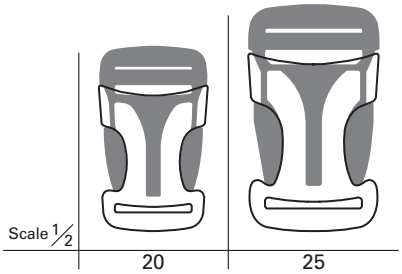

## LM-D / DB | Side-Release 旁開扣 | POM

**Single Adjuster** **Pouch Clip**

- Innovative oblique system provides easy operation as either side or push release.
- Does not require use of a special attaching machine.
- Pouch-Clip.

- YKK 新款“斜角設計扣合系統”按扣設計，使扣合功能更加順暢。
- 最簡潔設計。
- 易與布料連接。
- LM-D 適用薄布料，LM-DB 適用厚布料。

| CODE | SIZE | A | B | C | D | E | |
|---|---|---|---|---|---|---|---|
| LM20D | 20mm | 21 | 28 | 48 | 11 | 1 | |
| LM25D | 25mm | 26 | 34 | 56 | 12 | 1 | |
| LM20DB | 20mm | 21 | 28 | 48 | 11 | 2 | ● for thick fabric |
| LM25DB | 25mm | 26 | 34 | 56 | 12 | 2 | ● for thick fabric |

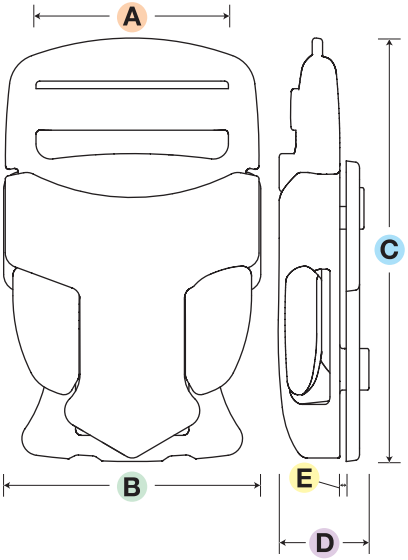

LM-D/DB Plate

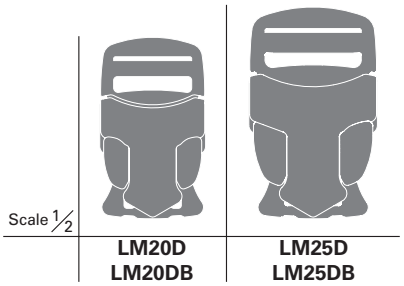

## LM-DH / DHB | Side-Release 旁開扣 | POM

**Single Adjuster** **Pouch Clip**

- Innovative oblique system provides easy operation as either side or push release.
- High strength and impact resistance.
- Does not require use of a special attaching machine.
- Pouch-Clip.

- YKK 獨特設計，加強堅固性及耐衝擊性。
- YKK 新款“斜角設計扣合系統”按扣設計，使扣合功能更加順暢。
- LM-DH 適用薄布料，LM-DHB 適用厚布料。

| CODE | SIZE | A | B | C | D | E | |
|---|---|---|---|---|---|---|---|
| LM25DH | 25mm | 26 | 36 | 56 | 19 | 1 | |
| LM25DHB | 25mm | 26 | 36 | 56 | 19 | 2 | ● for thick fabric |

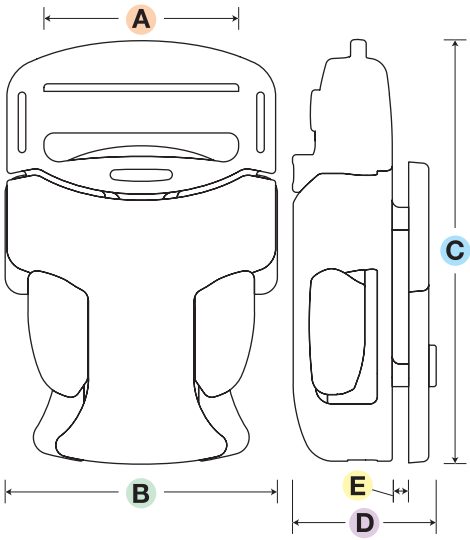

LM-DH/DHB Plate

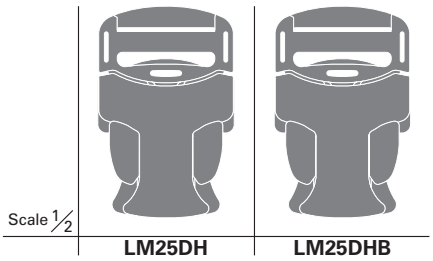

## LB-R | Side-Release 旁開扣 | POM

**Single Adjuster** **Break Resistant**

- Multi purpose standard side release buckle.
- 外型美觀。

| CODE | SIZE | A | B | C | D |
|---|---|---|---|---|---|
| LB20R | 20mm | 20 | 27 | 54 | 9 |
| LB25R | 25mm | 26 | 34 | 66 | 11 |
| LB30R | 30mm | 30 | 39 | 68 | 12 |
| LB38R | 38mm | 38 | 47 | 73 | 13 |
| LB40R | 40mm | 40 | 49 | 72 | 12 |
| LB50R | 50mm | 50 | 60 | 80 | 15 |

● Optional item

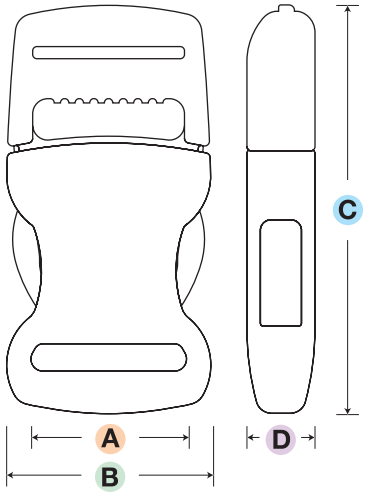


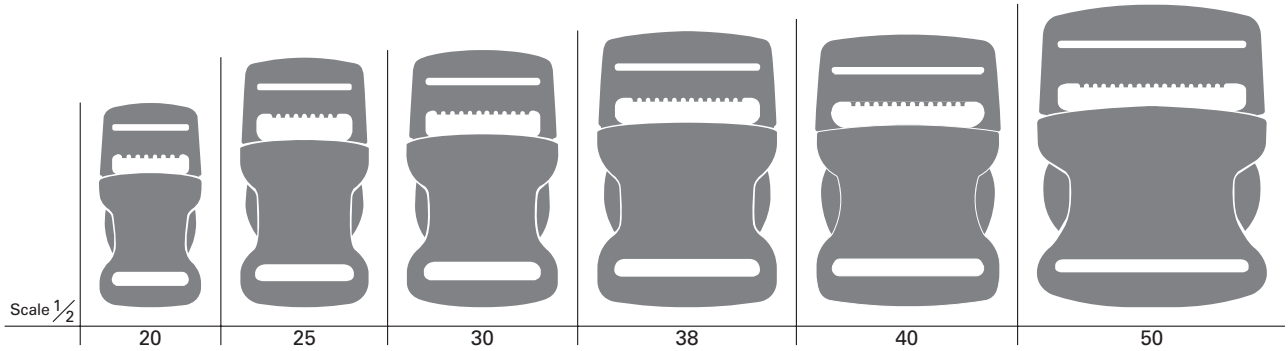

## LB-RD | Side-Release 旁開扣 | POM

**Dual Adjuster** **Break Resistant**

- Multi purpose standard side release buckle.
- Dual adjustment.
- 外型美觀。
- 兩側皆可調整織帶。

| CODE | SIZE | A | B | C | D |
|---|---|---|---|---|---|
| LB25RD | 25mm | 25 | 34 | 76 | 11 |
| LB30RD | 30mm | 30 | 41 | 76 | 12 |
| LB38RD | 38mm | 38 | 47 | 85 | 13 |
| LB50RD | 50mm | 50 | 60 | 94 | 14 |

● Optional item

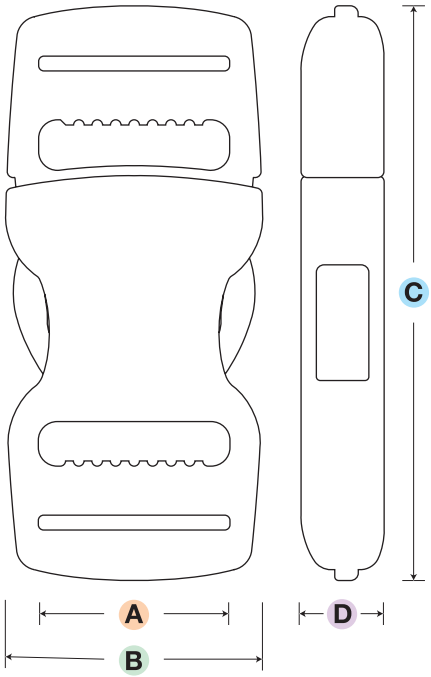


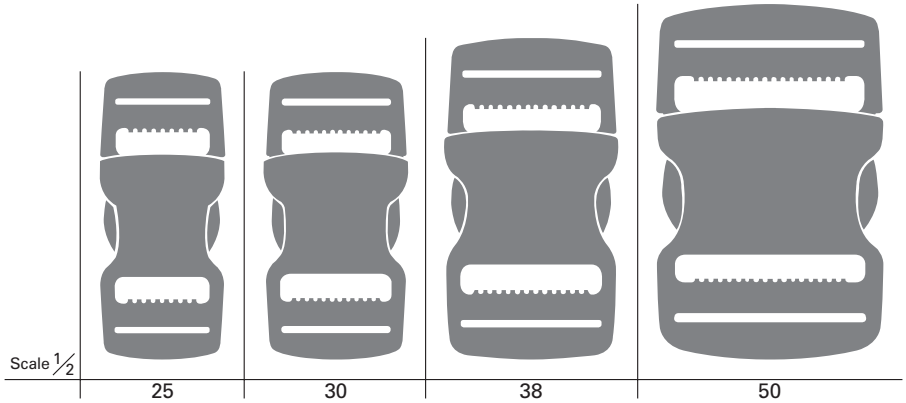

## UL Approved

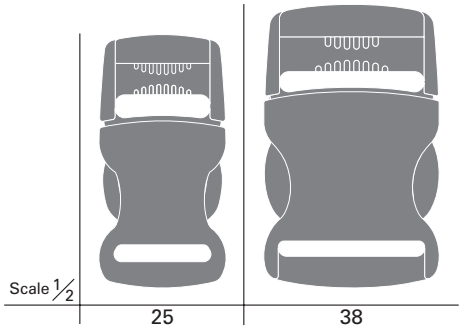


## LB-RP

**Side-Release** 旁開扣

**POM**

**Single Adjuster** **Break Resistant**

- 25mm size is UL Certified (Type 2,3,4H and 5R).
- Ideal for use in personal flotation devices (PFD).
- 38mm size is UL Certified (Type 2,2F,3,3F,4H,5H,5R and 5WV).

- 25mm 通過 UL 規格 (Type 2,3,4H and 5R) 之認證。
- 適合 PFD (Personal Flotation Device) 之用途。
- 38mm 通過 UL 規格 (Type 2,2F,3,3F,4H,5H,5R and 5WV) 之認證。

| CODE | SIZE | A | B | C | D |
|---|---|---|---|---|---|
| LB25RP | 25mm | 26 | 34 | 67 | 11 |
| LB38RP | 38mm | 38 | 46 | 75 | 13 |

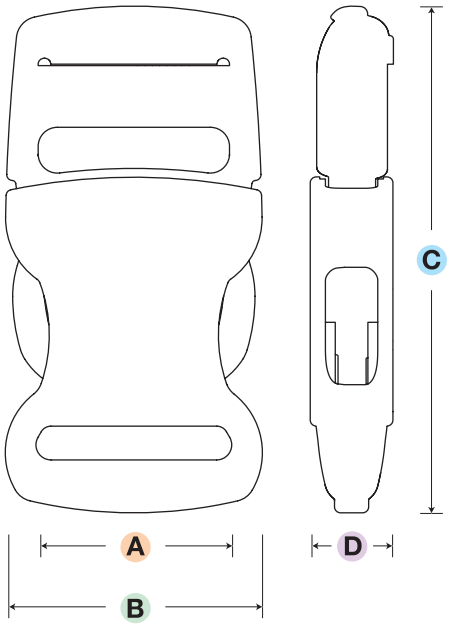

## LB-RND | Side-Release 旁開扣 | PA

**Dual Adjuster** **Break Resistant**

- High-grade PA material provides increased strength and break resistance.
- Double leg design reduces leg breakage.
- Dual adjustment.

- 採用最頂級尼龍材料製造，耐用不易斷裂。
- 簡單設計，高強度。
- 防止公扣斷裂。
- 兩側皆可調整織帶。

| CODE | SIZE | A | B | C | D |
|---|---|---|---|---|---|
| LB50RND | 50mm | 50 | 60 | 95 | 15 |

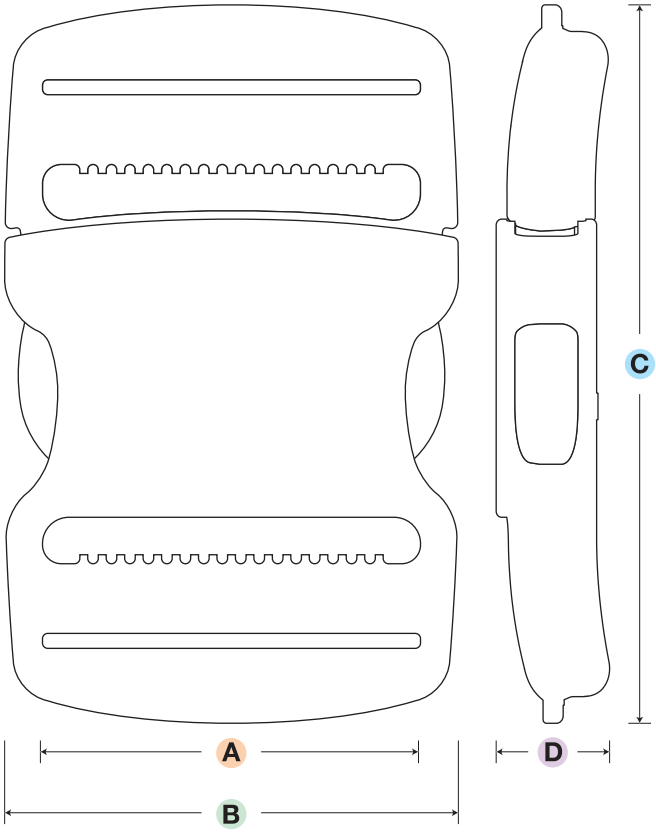

CYBERLOC®

## LB-X

Side-Release 旁開扣

POM

### Single Adjuster

- Smooth, sleek design.
- Large release tab allows for a smooth and effortless operation.

- 表面滑順。
- 開啟簡便。

| CODE | SIZE | A | B | C | D |
|---|---|---|---|---|---|
| LB20X | 20mm | 20 | 28 | 53 | 9 |
| LB25X | 25mm | 26 | 38 | 66 | 11 |
| LB30X | 30mm | 31 | 42 | 67 | 11 |
| LB38X | 38mm | 39 | 48 | 75 | 13 |
| LB50X | 50mm | 51 | 61 | 80 | 14 |

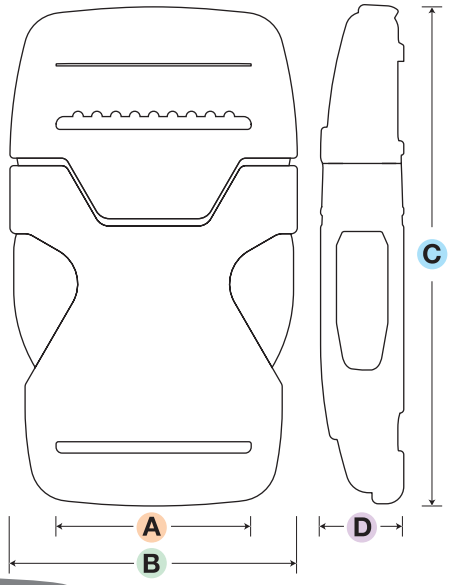


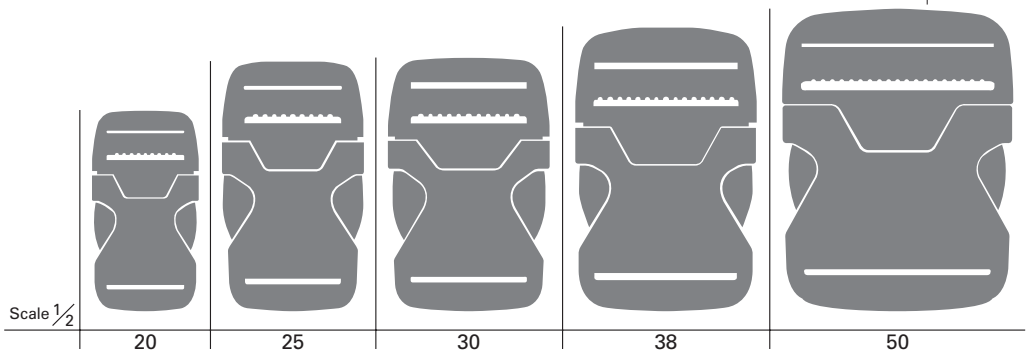


CYBERLOC®

## LB-XD

Side-Release 旁開扣

POM

### Dual Adjuster

- Smooth, sleek design.
- Large release tab allows for a smooth and effortless operation.
- Dual adjustment.

- 表面滑順。
- 開啟簡便。
- 兩側皆可調整織帶。

| CODE | SIZE | A | B | C | D |
|---|---|---|---|---|---|
| LB25XD | 25mm | 26 | 38 | 72 | 11 |
| LB38XD | 38mm | 39 | 48 | 85 | 13 |

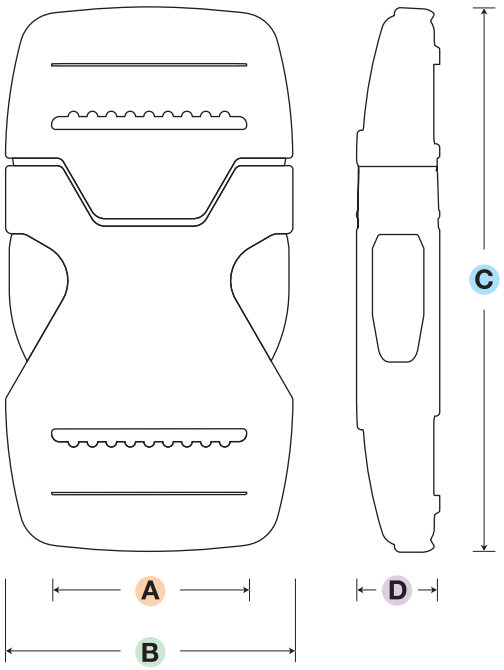


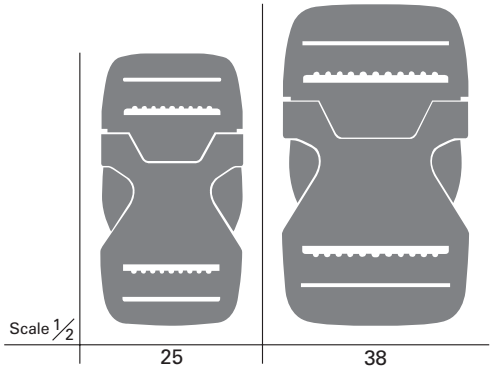

## LB-XC

Side-Release 旁開扣

POM

**Single Adjuster**

- Compact, contoured version of LB-X, suitable for a curved surface.
- Large release tab allows for a smooth and effortless operation.
- 側面彎曲設計，可服貼於產品。

| CODE | SIZE | A | B | C | D |
|---|---|---|---|---|---|
| LB16XC | 16mm | 16 | 22 | 48 | 9 |

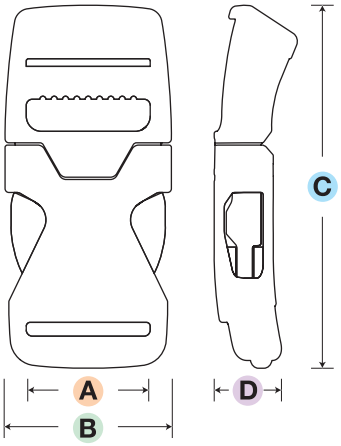

## LB-RH

Side-Release 旁開扣

POM

**Single Adjuster**

- Small buckle with a curved surface and durable plug adjuster.
- 輕巧曲面設計。

| CODE | SIZE | A | B | C | D |
|---|---|---|---|---|---|
| LB16RH | 16mm | 17 | 23 | 49 | 9 |

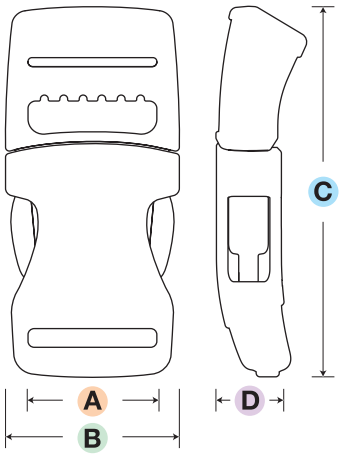

## LB-RC

Side-Release 旁開扣

POM

**Single Adjuster**

- Small, curved version of the LB-R series.
- 曲面設計之小型扣具。

| CODE | SIZE | A | B | C | D |
|---|---|---|---|---|---|
| LB15RC | 15mm | 15 | 20 | 40 | 9 |

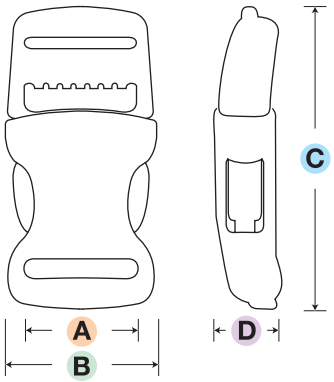

Logo

## LB-PC | Side-Release 旁開扣 | POM

**Single Adjuster**

- Contoured buckle with high strength.
- Can be used with various tape thickness.
- Incorporates a unique multiple locking system.
- Recommended for use in pet collars or sports sandals.

- 上下・側面之咬合構造展現了最強的強韌度。
- 側面彎孤造型，可服貼於產品上，可搭配較厚的織帶。

| CODE | SIZE | A | B | C | D |
|---|---|---|---|---|---|
| LB16PC | 16mm | 16 | 23 | 43 | 9 |
| LB20PC | 20mm | 20 | 27 | 47 | 10 |
| LB25PC | 25mm | 25 | 35 | 61 | 13 |

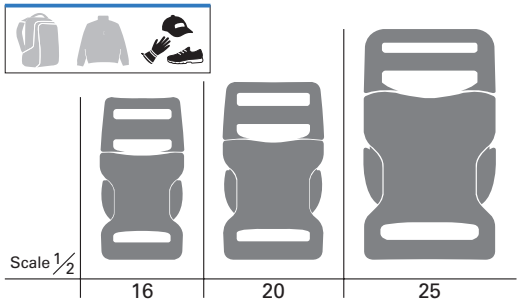


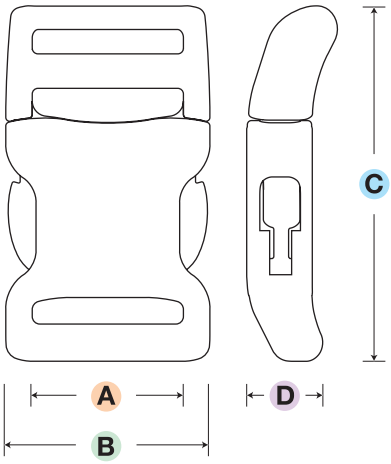


Minimal

Logo

## LB-LB | Side-Release 旁開扣 | POM

**Single Adjuster**

- Super-small and unique side release buckle.
- 旁開扣款式尺寸最小型扣具。

| CODE | SIZE | A | B | C | D |
|---|---|---|---|---|---|
| LB08LB | 8mm | 8 | 14 | 26 | 6 |
| LB10LB | 10mm | 10 | 17 | 29 | 7 |

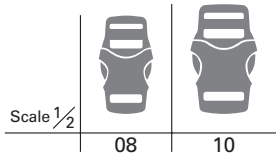


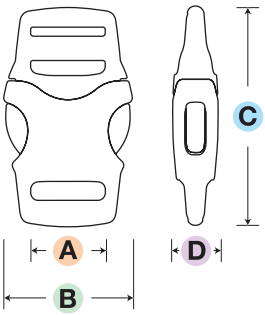


Minimal

Logo

## LB-LS | Side-Release 旁開扣 | POM

- Small strap buckle designed for use with 0.8mm diameter cord.

- 適用於小尺寸織帶需求扣具。
- 可搭配 0.8mm 的繩子。

| CODE | SIZE | A | B | C | D |
|---|---|---|---|---|---|
| LB08LS | 8mm | 8 | 14 | 24 | 6 |

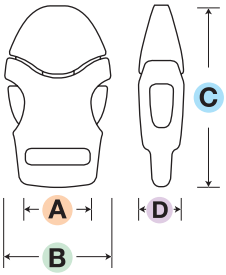

## Thin

### LB-RS | Side-Release 旁開扣 | POM

**Single Adjuster** **Break Resistant**

- Slim and lightweight design.
- Unique plug design provides a soft release.

- 超輕薄短小型扣具。
- 獨特的公扣環狀設計及輕盈開啟觸感。

| CODE | SIZE | A | B | C | D |
|---|---|---|---|---|---|
| LB20RS | 20mm | 20 | 27 | 45 | 7 |
| LB25RS | 25mm | 25 | 32 | 46 | 7 |
| LB38RS | 38mm | 38 | 48 | 57 | 8 |

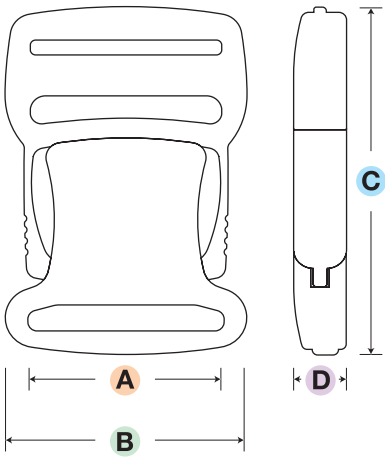


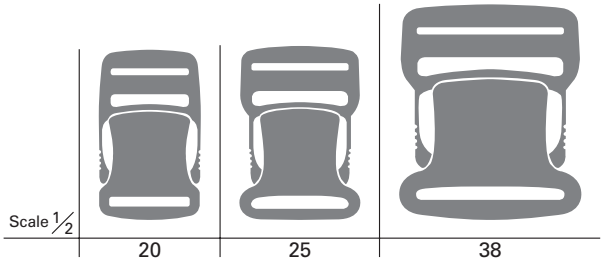


**2-way release buckle** Easy to release especlally with small size buckle! Even with bulky gloves on!

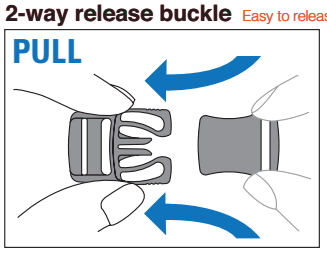


Because of the large side levers and the unique plug shape, you can pull and unbuckle with ease.

&

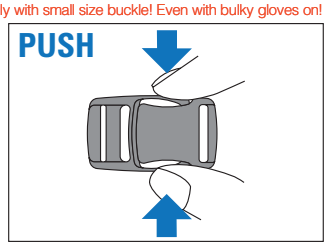


The plug can be released with just a little push.

### LB-S | Side-Release 旁開扣 | POM

**Single Adjuster**

- Movable middle bar prevents webbing slippage.
- "W" spring design allows for easy release.

- 公扣、母扣任何一面均適用。
- 織帶可由中間移動式橫桿調整，牢牢的將織帶固定。

| CODE | SIZE | A | B | C | D |
|---|---|---|---|---|---|
| LB20S | 20mm | 21 | 26 | 42 | 8 |
| LB25S | 25mm | 26 | 31 | 46 | 9 |
| LB30S | 30mm | 31 | 37 | 50 | 10 |
| LB38S | 38mm | 39 | 46 | 58 | 12 |

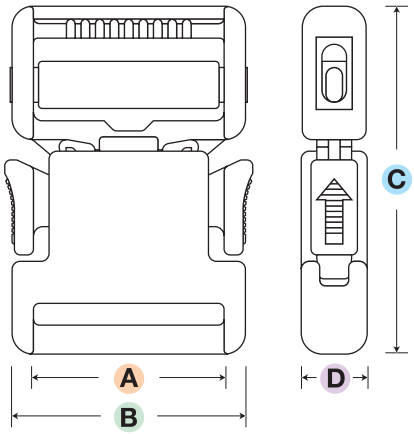


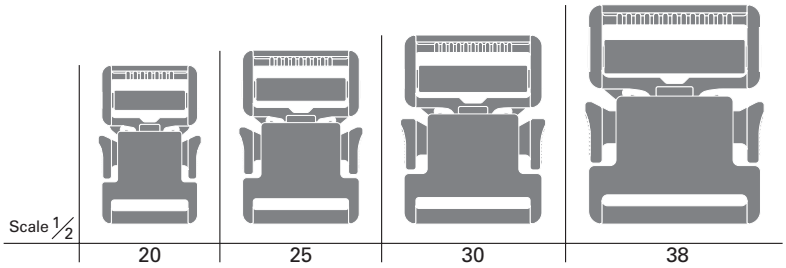

New

Logo

## IB-FX

**Front-Release** 前開扣

**POM**

**Single Adjuster**

- Compact and simple design with a large center central release button.
- 小尺寸的前開扣。
- 大面積的開啟設計。提升操作性。

| CODE | SIZE | A | B | C | D |
|---|---|---|---|---|---|
| IB15FX | 15mm | 16 | 22 | 33 | 7 |

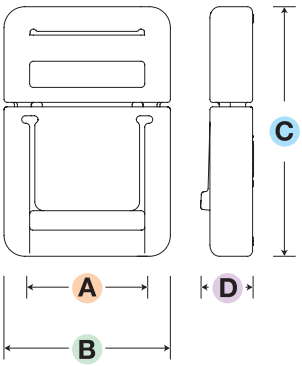


Minimal

## LB-FR

**Front-Release** 前開扣

**POM**

**Non Adjustable**

- Super-small design featuring an easy to use, front-push release button.
- 超迷你尺寸的前開扣。
- 容易開啟。

| CODE | SIZE | A | B | C | D |
|---|---|---|---|---|---|
| LB10FR | 10mm | 11 | 15 | 25 | 7 |

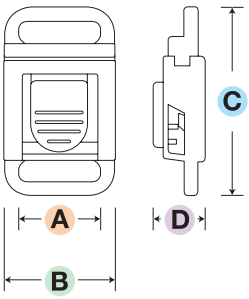

## LB-F2 | Front-Release 前開扣 | POM

**Single Adjuster**

- Slim design with a small center release button makes this ideal for shoes or sandals applications.
- Push button can be ordered in special colors.

- 容易開啟。
- 扣身與壓鈕有多種特別顏色可供選擇。

| CODE | SIZE | A | B | C | D |
|---|---|---|---|---|---|
| LB25F2 | 25mm | 26 | 32 | 50 | 9 |
| LB30F2 | 30mm | 31 | 37 | 54 | 9 |
| LB38F2 | 38mm | 39 | 46 | 58 | 9 |

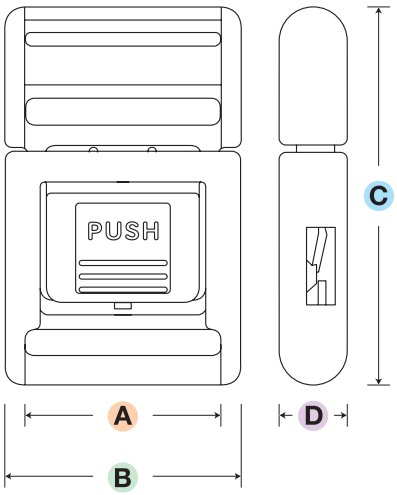


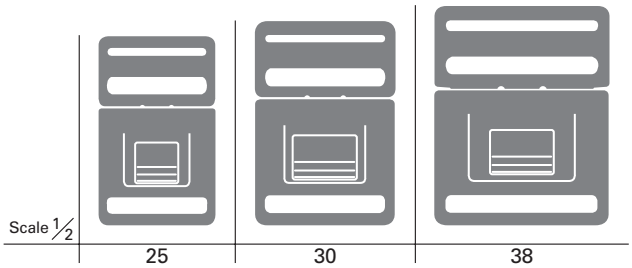

## LB-FU | Front-Release 前開扣 | POM

**Single Adjuster**

- Easy release using center button.
- 壓下中央鈕即可解開。

| CODE | SIZE | A | B | C | D |
|---|---|---|---|---|---|
| LB25FU | 25mm | 25 | 34 | 51 | 9 |
| LB30FU | 30mm | 31 | 39 | 56 | 9 |
| LB38FU | 38mm | 38 | 48 | 57 | 9 |
| LB50FU | 50mm | 50 | 60 | 58 | 9 |

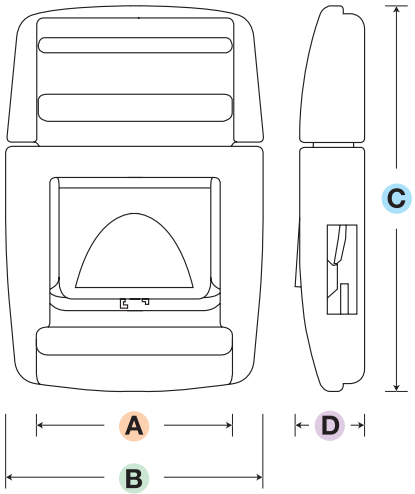


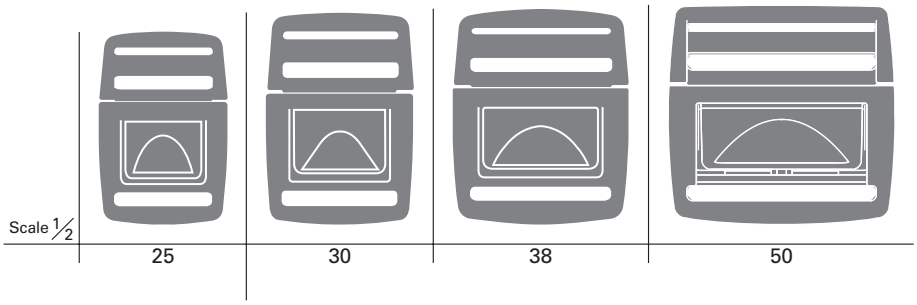

## Rotatable

### LB-Q | Front-Release 前開扣 | POM

**Single Adjuster**

- Unique center release, rotatable buckle.
- Rotates up to 45 degrees to either side.

- 獨特的旋轉扣。
- 可左右 45 度旋轉至任一側。

| CODE | SIZE | A | B | C | D |
|---|---|---|---|---|---|
| LB20Q | 20mm | 21 | 31 | 57 | 8 |
| LB25Q | 25mm | 26 | 36 | 62 | 8 |
| LB30Q | 30mm | 31 | 38 | 67 | 8 |
| LB38Q | 38mm | 39 | 46 | 69 | 8 |

● Optional item

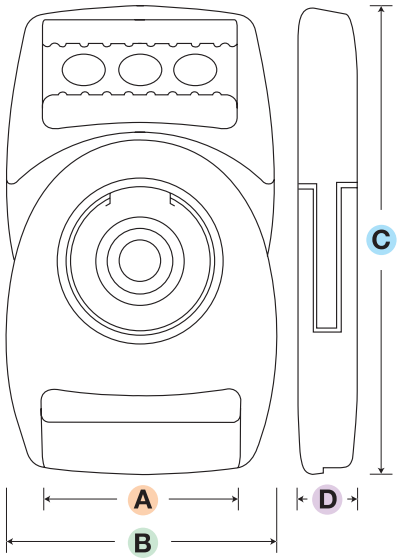

LB-Q Tape

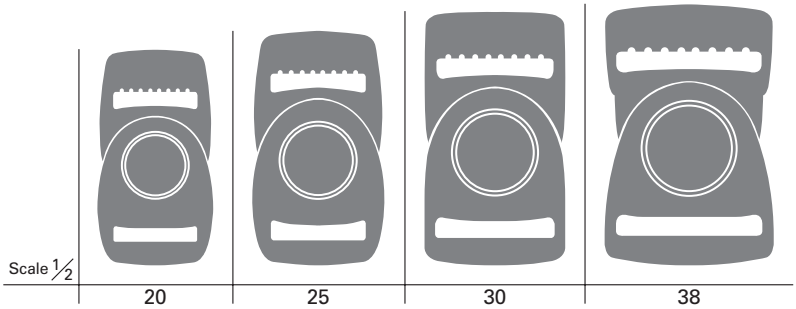


## Suspender

### WB-S1 | Front-Release 前開扣 | POM

**Single Adjuster**

- Center release buckle recommended for coveralls.

- 中央開啟扣。
- 適用於工作服上。

| CODE | SIZE | A | B | C | D |
|---|---|---|---|---|---|
| WB38S1 | 38mm | 38 | 45 | 58 | 8 |

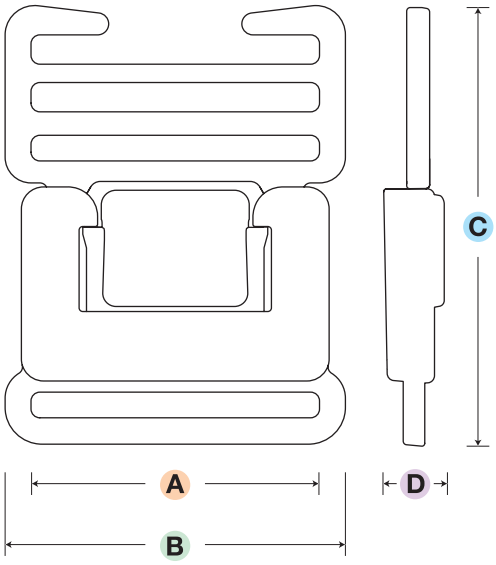

3way

Logo

## LB-FW2 / FW

**Front-Release** 前開扣

**POM**

**Dual Adjuster**

- Ergonomically designed, center release buckle.
- Uses a movable tape lock mechanism to prevent slippage.

- 人體工學設計。
- 單按鈕開合。
- YKK 防滑織帶扣。

| CODE | SIZE | A | B | C | D | E |
|---|---|---|---|---|---|---|
| LB25FW2 | 25mm | 25 | 42 | 88 | 11 | 26 |
| LB30FW | 30mm | 31 | 57 | 104 | 12 | 52 |

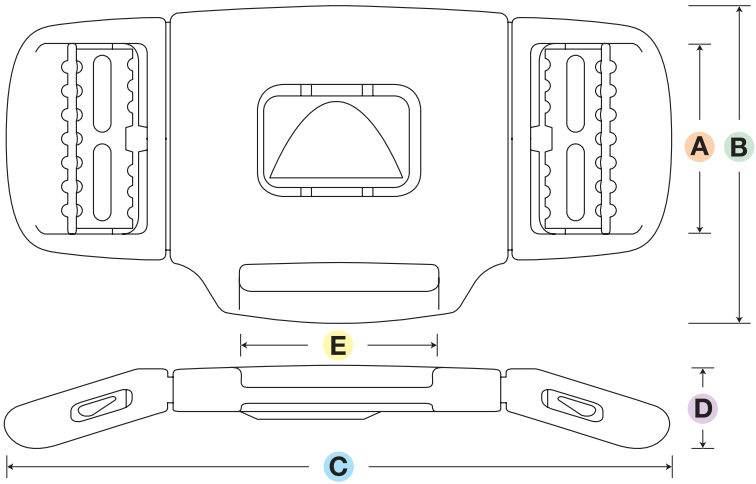

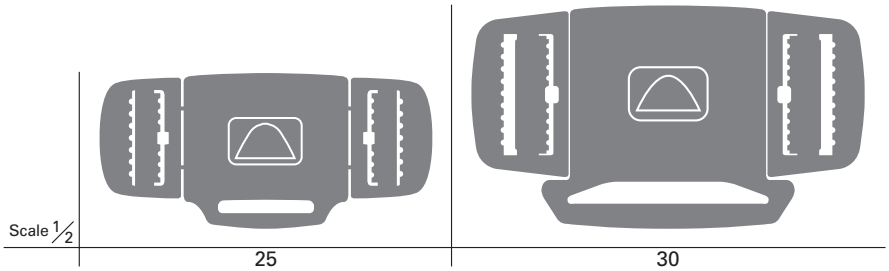

## Belt Buckle

### WB-H 轉鎖扣 POM

**Single Adjuster**

- Pop-up motion allows for easy release.
  (Single-finger operation)
- 簡易向上即可開啟扣具。
- 單指操作之腰帶扣。

| CODE | SIZE | A | B | C | D |
|---|---|---|---|---|---|
| WB20H | 20mm | 20 | 28 | 49 | 11 |
| WB25H | 25mm | 26 | 33 | 50 | 11 |

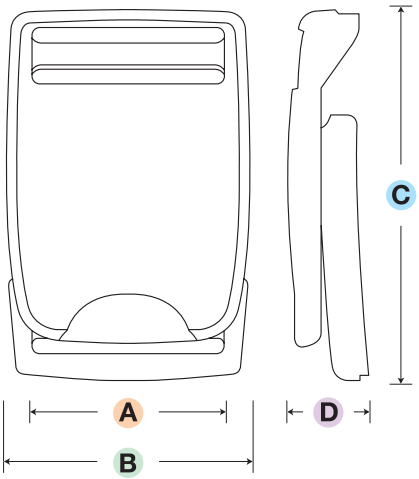


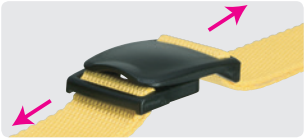

① Lock 扣合

② Turn up 開啟

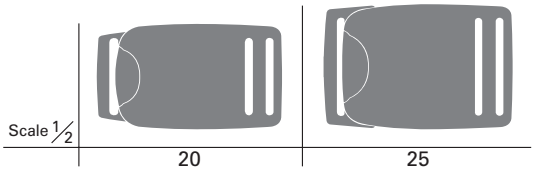


## Belt Buckle

### WB-HS 轉鎖扣 POM

**Single Adjuster**

- Pop-up motion allows for easy release.
- Short length belt buckle.
  (Single-finger operation)
- 簡易向上即可開啟扣具。
- 短距版腰帶扣。
- 單指操作之腰帶扣。

| CODE | SIZE | A | B | C | D |
|---|---|---|---|---|---|
| WB25HS | 25mm | 26 | 32 | 43 | 8 |

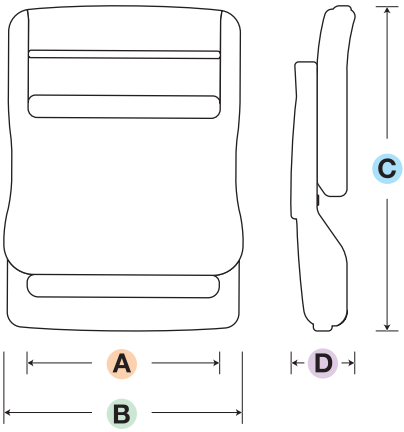

## Belt Buckle

### WB-DA2 轉鎖扣 POM

- Belt length can be adjusted in one simple motion.
- No need to stitch the buckle on the belt.

- 僅需輕拉即可調整或開啟。
- 無需車縫。

| CODE | SIZE | A | B | C | D |
|---|---|---|---|---|---|
| WB30DA2 | 30mm | 34 | 42 | 61 | 13 |
| WB38DA2 | 38mm | 39 | 47 | 59 | 14 |

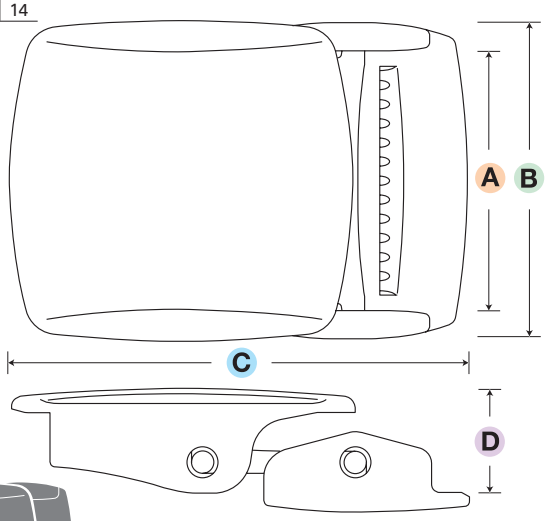

WB-DA2 Tape

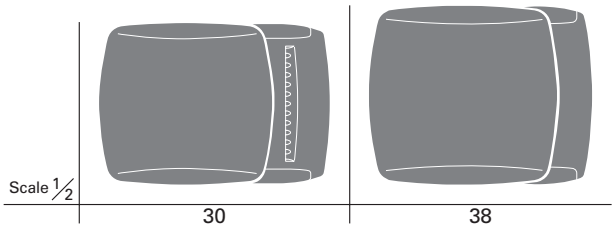


## Belt Buckle

### WB-DAH1 轉鎖扣 POM

- Belt length can be adjusted in one simple motion.
- No need to stitch the buckle on the belt.
- For thin webbing.

- 織帶容易調整。
- 免車縫式腰帶扣。
- 可搭配薄型織帶。

| CODE | SIZE | A | B | C | D |
|---|---|---|---|---|---|
| WB25DAH1 | 25mm | 25 | 32 | 41 | 11 |

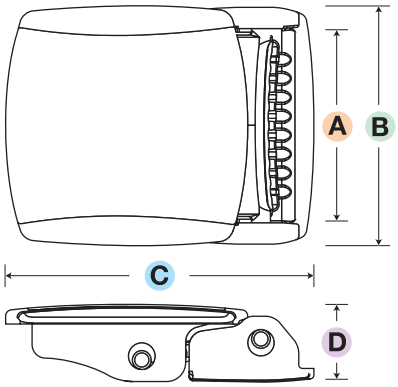

## LA-CB 調整扣 POM

- Easy adjustment with a quick release.
- Recommend using a tape that is 1.2-1.7mm thick.

- 高穩定性，適用背包的調整扣。
- 容易調整及開啟，適用 1.2 – 1.7mm 厚度織帶。

| CODE | SIZE | A | B | C | D |
|---|---|---|---|---|---|
| LA20CB | 20mm | 21 | 27 | 30 | 12 |
| LA25CB | 25mm | 26 | 32 | 30 | 14 |

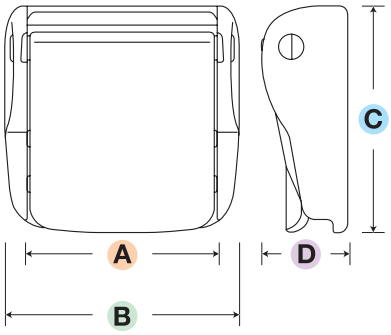


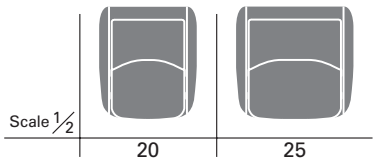

## LA-CN 調整扣 POM

- Thin, lightweight design offers easy adjustment and quick release.

- 薄型與輕量化設計。
- 易調整與方便操作設計。

| CODE | SIZE | A | B | C | D |
|---|---|---|---|---|---|
| LA38CN | 38mm | 39 | 45 | 47 | 11 |

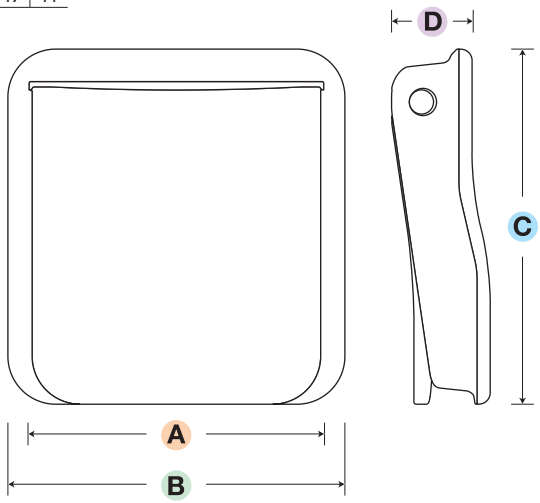

LA-CN Tape

# I.D. Card Holder 名片夾

## LJ-H / HW

**Side-Release** 名片夾 **Plug:** PA **Socket:** PC

- LJ10H is designed to hold a standard-size business card.
- One-touch attachment and release.
- Cover is made of solid, stong polycarbonate.
- The plastic belt fits all buckle size.
- LJ03H is standard type, LJ03HW is rubber sealed type for water resistance.
- Available in all YKK colors for both plug and socket.

- LJ10H 可放入一般商務名片。
- 容易組裝。
- 母扣使用堅固的 PC 材質 (Polycarbonate)。
- 塑膠皮帶適用所有尺寸的名片夾。
- LH03HW 具有防水功能，在公扣及母扣結合處使用橡膠防水滲入的裝置。
- 公母扣所有顏色皆可任意搭配。

| CODE | SIZE | A | B | C |
|---|---|---|---|---|
| LJ03H | 3mm | 38 | 50 | 6 |
| LJ03HW | 3mm | 38 | 50 | 6 |
| LJ05H | 5mm | 52 | 76 | 8 |
| LJ10H | 10mm | 76 | 116 | 8 |

**Plastic belt (Option)**

| SIZE |
|---|
| 167 x 10 |

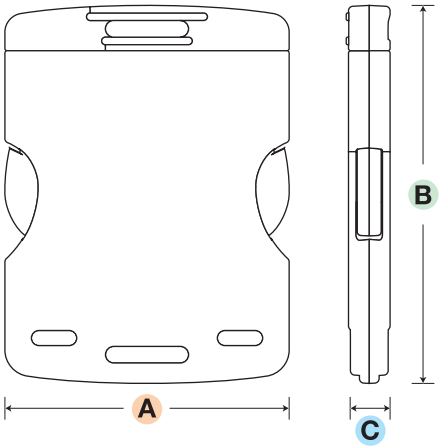


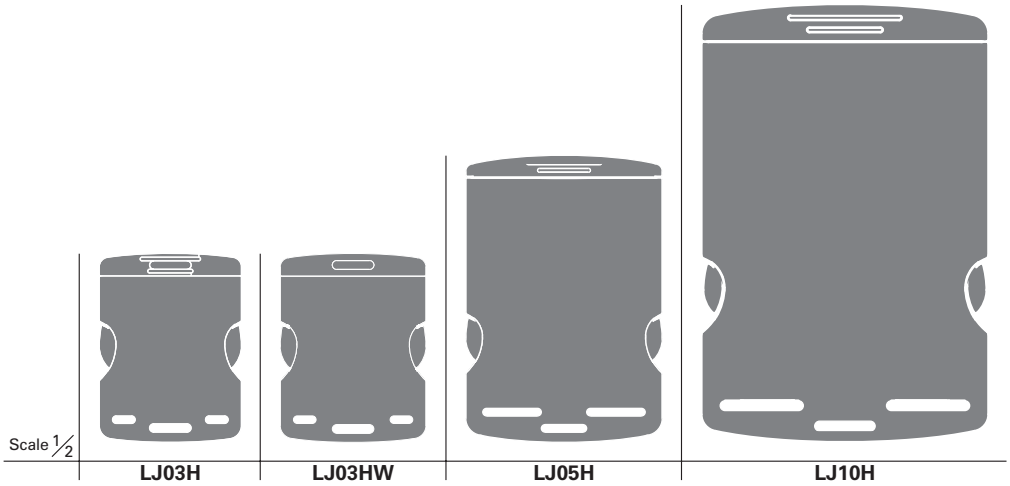

LJ03H

LJ05H

LJ10H

New

## LK-GV 梯扣 POM

- Strap adjuster designed with higher slippage angle provides greater slippage strength under jarring conditions.
- Side shape curved designed to fit shape of finger enables easy adjustment.
- Light weight innovative design.
- Can use family products of LB-GV and LB-GP.

- 高角度調整織帶止滑。
- 符合人體工學。
- 輕量化造型 稜角設計。
- 可搭配 LB-GV,LB-GP 使用。

| CODE | SIZE | A | B | C | D |
|---|---|---|---|---|---|
| LK10GV | 10mm | 10 | 15 | 27 | 8 |
| LK16GV | 16mm | 17 | 23 | 32 | 9 |
| LK20GV | 20mm | 21 | 27 | 32 | 9 |
| LK25GV | 25mm | 26 | 32 | 35 | 10 |

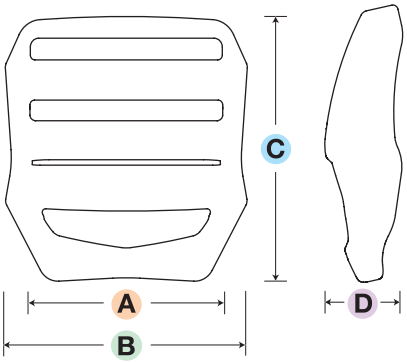


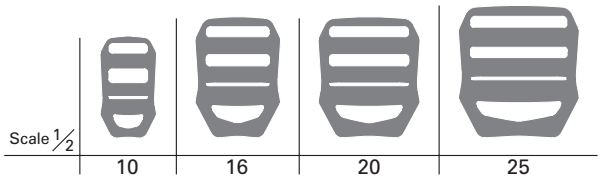


New

## LK-GVS 梯扣 POM

**Single Type**

- Strap adjuster designed with higher slippage angle provides greater slippage strength under jarring conditions.
- Side shape curved designed to fit shape of finger enables easy adjustment.
- Light weight innovative design.
- Can use family products of LB-GV and LB-GP.
- Single bar adjuster.

- 高角度調整織帶止滑。
- 符合人體工學。
- 輕量化造型菱角設計。
- 可搭配 LB-GV,LB-GP 使用。
- 單調整梯扣。

| CODE | SIZE | A | B | C | D |
|---|---|---|---|---|---|
| LK38GVS | 38mm | 39 | 46 | 30 | 13 |

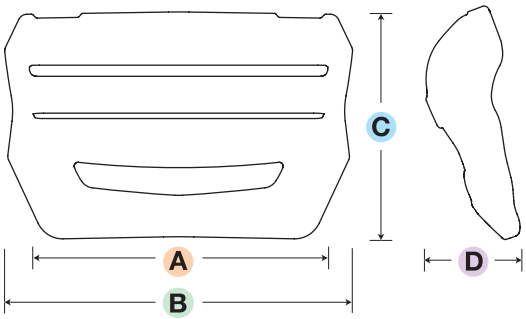

Sharpn' Loc®

## LK-YC 梯扣 POM

- Sharpn' Loc® series adjuster.
- Compact and lightweight.
- Tab design allows for easy adjustment.

- 輕量化設計。
- 搭配 LB-YC 系列梯扣。
- 前端可輕易調整織帶。

| CODE | SIZE | A | B | C | D |
|---|---|---|---|---|---|
| LK16YC | 16mm | 16 | 22 | 28 | 8 |
| LK20YC | 20mm | 21 | 26 | 28 | 9 |
| LK25YC | 25mm | 26 | 31 | 31 | 9 |

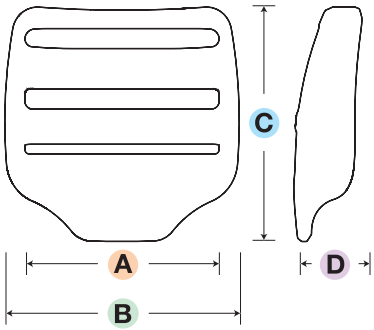


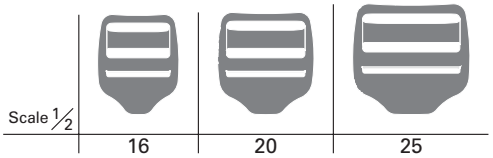


Sharpn' Loc®

## LK-YCS 梯扣 POM

**Single type**

- Sharpn' Loc® series adjuster.
- Compact and lightweight.
- Tab design allows for easy adjustment.
- Single bar type.

- 輕量化設計。
- 前端可輕易調整織帶。
- 單調整梯扣。

| CODE | SIZE | A | B | C | D |
|---|---|---|---|---|---|
| LK38YCS | 38mm | 39 | 45 | 30 | 12 |

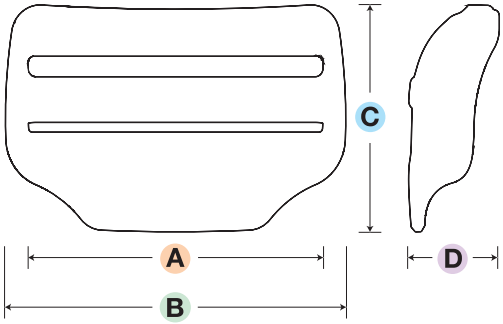

## LK-TS 梯扣 POM

- Compact and light weight.
- Family product of LB-TS buckle.
- The open design on the finger tab allows for the addition of a cord or webbing for easy adjustment.

- 輕量化俐落外型。
- 可搭配 LB-TS 系列。
- 手壓處開口設計，可吊掛織帶並能輕易調節。

| CODE | SIZE | A | B | C | D |
|---|---|---|---|---|---|
| LK16TS | 16mm | 17 | 22 | 27 | 9 |
| LK20TS | 20mm | 21 | 27 | 28 | 9 |
| LK25TS | 25mm | 26 | 32 | 30 | 9 |

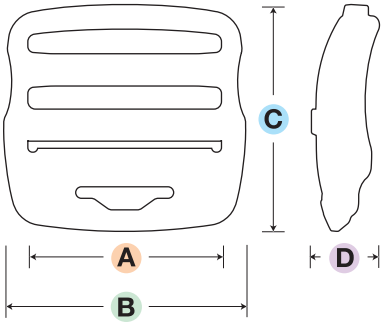

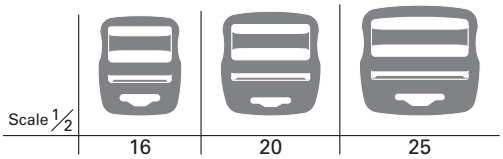

## LK-HC 梯扣 POM

- Hook adjuster gives the user flexability to hang any item along a webbing strap including backpacks, tent straps.
- 可調節式掛鉤，使用者可隨性在織帶上懸掛物品。

| CODE | SIZE | A | B | C | D |
|---|---|---|---|---|---|
| LK25HC | 25mm | 25 | 31 | 50 | 11 |

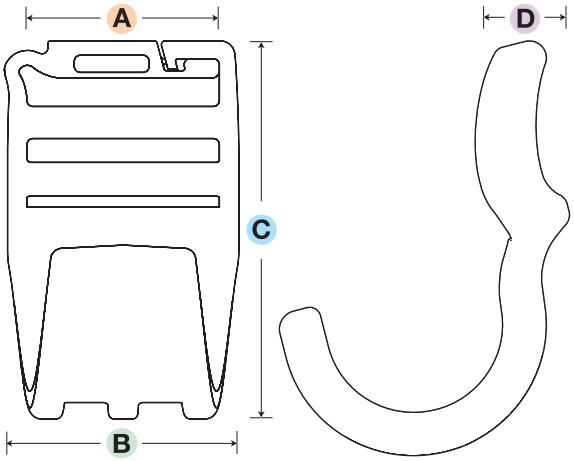

## LK-EA 梯扣 POM

- Thin, lightweight and compact design.
- 輕量化與耐衝擊特點。

| CODE | SIZE | A | B | C | D |
|---|---|---|---|---|---|
| LK20EA | 20mm | 21 | 26 | 25 | 9 |
| LK25EA | 25mm | 26 | 32 | 27 | 10 |

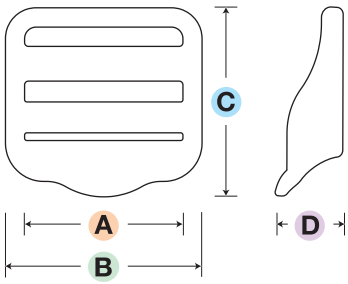


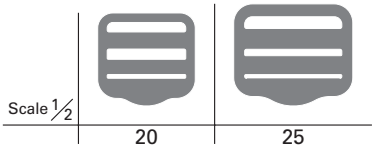

## LOCWAVE® Adjuster

Logo

### LK-WG 梯扣

POM

- Can accept various tape thickness.
- Curved tab design provides easy webbing adjustment.
- 波浪造型及特殊角度設計。

| CODE | SIZE | A | B | C | D |
|---|---|---|---|---|---|
| LK20WG | 20mm | 21 | 28 | 34 | 10 |
| LK25WG | 25mm | 26 | 32 | 34 | 10 |
| LK38WG | 38mm | 39 | 47 | 39 | 11 |
| LK50WG | 50mm | 51 | 61 | 43 | 13 |

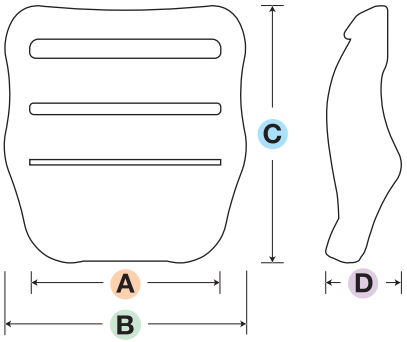


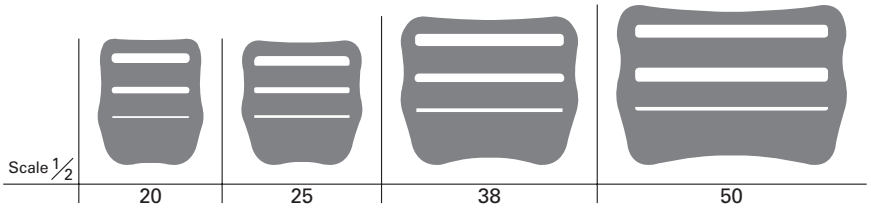


## LOCWAVE® Adjuster

Logo

### LK-WGS 梯扣

POM

**Single type**

- Can accept various tape thickness.
- Curved tab design provides easy webbing adjustment.
- Single bar adjuster.
- 單調整梯扣。

| CODE | SIZE | A | B | C | D |
|---|---|---|---|---|---|
| LK20WGS | 20mm | 21 | 28 | 29 | 11 |
| LK25WGS | 25mm | 26 | 32 | 29 | 12 |
| LK38WGS | 38mm | 39 | 46 | 32 | 12 |

● Optional item

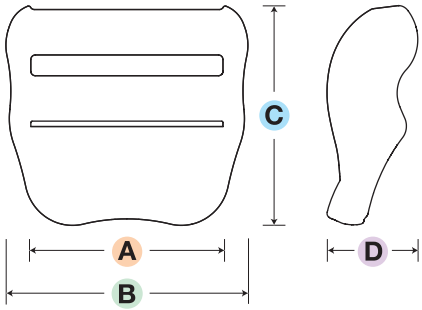


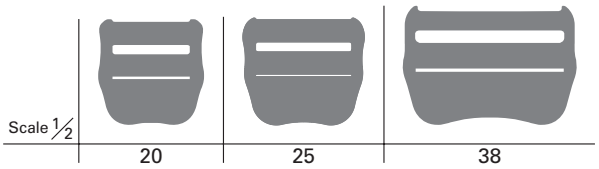


## LOCWAVE® Adjuster

Logo

### LK-WL 梯扣

POM

**Long**

- Offers a large logo space.
- Similar design and strength as LK25WG.
- Curved tab design provides easy webbing adjustment.
- 波浪造型及特殊角度設計。
- 更大 LOGO 刻印空間。

| CODE | SIZE | A | B | C | D |
|---|---|---|---|---|---|
| LK25WL | 25mm | 26 | 34 | 45 | 11 |

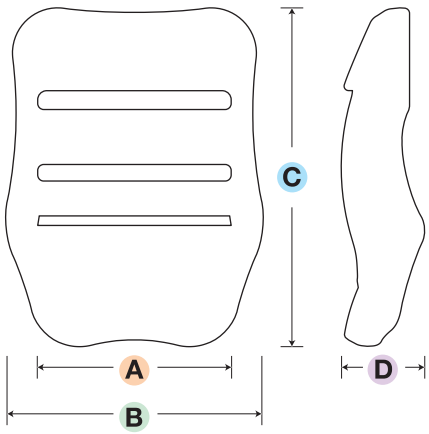

## Lightweight Adjuster

### LK-LV 梯扣 POM

- Wide, curved tab design provides easy webbing adjustment.
- Generous opening allows for smooth webbing insertion while also preventing slippage.
- Lightweight, innovative design.
- Allows for additional cord insertion.

- 創新的輕量化梯扣設計。
- 亦適用於穿繩索。

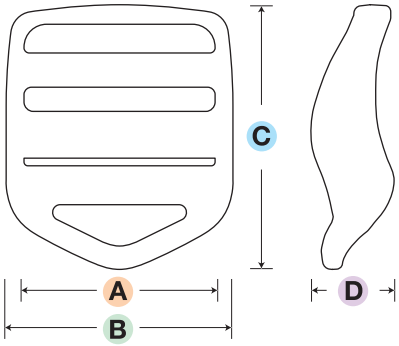


| CODE | SIZE | A | B | C | D |
|---|---|---|---|---|---|
| LK10LV | 10mm | 11 | 15 | 27 | 9 |
| LK16LV | 16mm | 17 | 22 | 30 | 9 |
| LK20LV | 20mm | 21 | 26 | 35 | 12 |
| LK25LV | 25mm | 26 | 30 | 35 | 11 |
| LK38LV | 38mm | 39 | 44 | 39 | 14 |

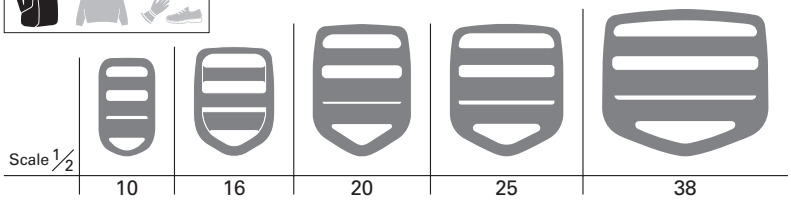


## Lightweight Adjuster

### LK-LVS 梯扣 POM

**Single type**

- Wide, curved tab design provides easy webbing adjustment.
- Generous opening allows for smooth webbing insertion while also preventing slippage.
- Lightweight, innovative design.
- Single bar adjuster.

- 前端凸出設計，可輕易調整操作織帶。
- 具備方便織帶組裝及防織帶滑動設計。
- 單調整梯扣。

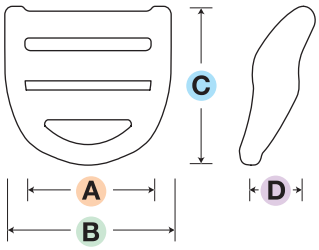


| CODE | SIZE | A | B | C | D |
|---|---|---|---|---|---|
| LK16LVS | 16mm | 17 | 22 | 21 | 7 |

## HAMMERLOC® Adjuster

Logo

### LK-PT 梯扣 POM

- Wide tab allows for easy adjustment.
- Use in conjunction with the HAMMERLOC® buckle for a sleek appearance.
- 流線造型使箱包外形更加美觀，尤其是搭配 HAMMERLOC® 扣具。

| CODE | SIZE | A | B | C | D |
|---|---|---|---|---|---|
| LK20PT | 20mm | 21 | 26 | 35 | 10 |
| LK25PT | 25mm | 26 | 32 | 39 | 11 |

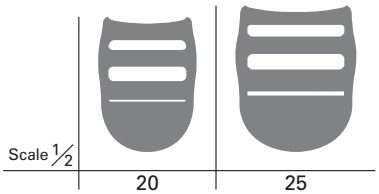


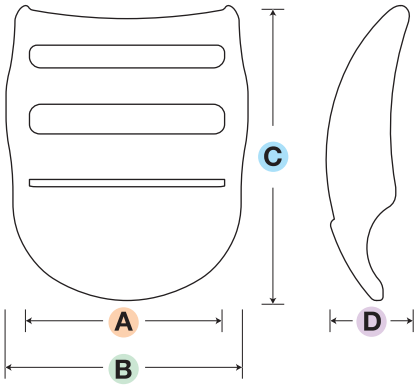

Logo

### LK-U 梯扣 POM

- Standard, multi-purpose adjuster.
- 流線型的設計。

| CODE | SIZE | A | B | C | D |
|---|---|---|---|---|---|
| LK20U | 20mm | 21 | 30 | 44 | 9 |
| LK25U | 25mm | 26 | 35 | 44 | 9 |
| LK30U | 30mm | 31 | 40 | 47 | 10 |
| LK38U | 38mm | 39 | 49 | 55 | 11 |

LK-U Tape

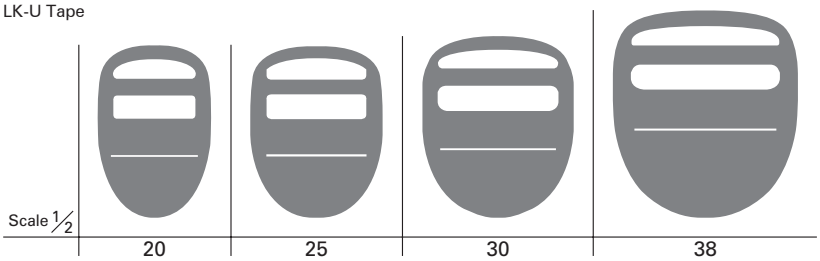


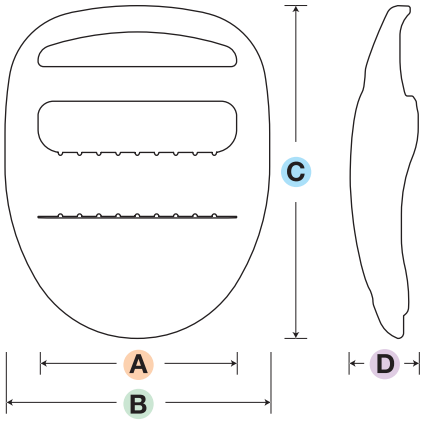


## UL Approved

### LK-KU 梯扣 POM

- UL Certified (Type2, 3, 4H and 5R)
- Ideal for use in personal flotation devices (PFD)
- 通過 UL 規格 (Type2, 3, 4H, 5R) 之認證。
- 適合 PFD (Personal Flotation Device) 之用途。

| CODE | SIZE | A | B | C | D |
|---|---|---|---|---|---|
| LK25KU | 25mm | 26 | 35 | 44 | 9 |
| LK38KU | 38mm | 39 | 47 | 45 | 11 |

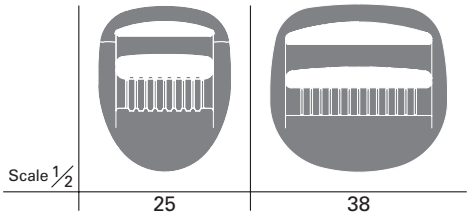


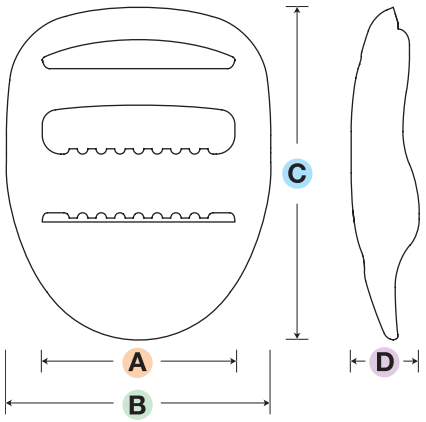

## LK-E / EK 梯扣

POM

- Lightweight and compact design.
- 輕量化和小型的設計。

| CODE | SIZE | A | B | C | D |
|---|---|---|---|---|---|
| LK15E | 15mm | 16 | 20 | 34 | 9 |
| LK20E | 20mm | 21 | 26 | 34 | 9 |
| LK25E | 25mm | 26 | 32 | 35 | 9 |
| LK30E | 30mm | 31 | 38 | 39 | 9 |
| LK25EK | 25mm | 25.8 | 32.2 | 35.7 | 8.8 |

● Logo Available

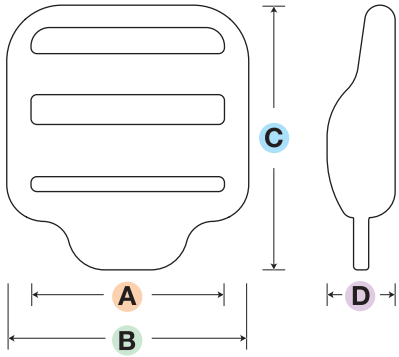


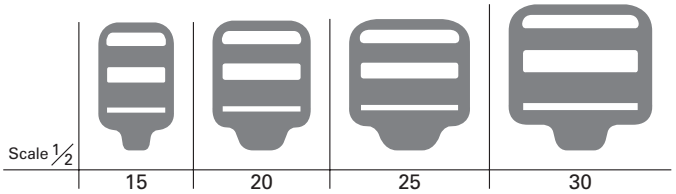

## LK-M 梯扣

POM

- Movable middle bar prevents webbing slippage.
- 中軸可移動，可緊貼織帶。

| CODE | SIZE | A | B | C | D |
|---|---|---|---|---|---|
| LK20M | 20mm | 21 | 27 | 35 | 6 |
| LK25M | 25mm | 26 | 31 | 38 | 6 |

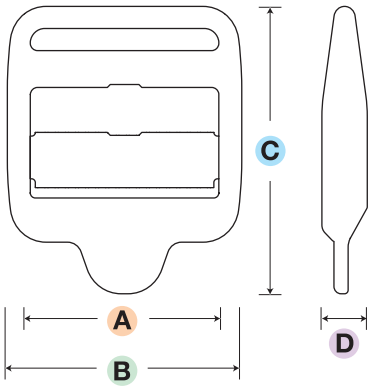


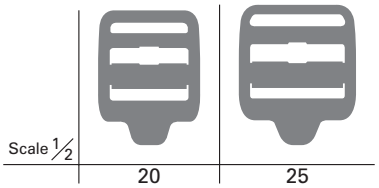

## LK-TSR 梯扣

PC

**Transparent**

- Reflective adjuster.
- 反光梯扣。

| CODE | SIZE | A | B | C | D |
|---|---|---|---|---|---|
| LK20TSR | 20mm | 21 | 27 | 37 | 9 |
| LK25TSR | 25mm | 26 | 33 | 37 | 9 |

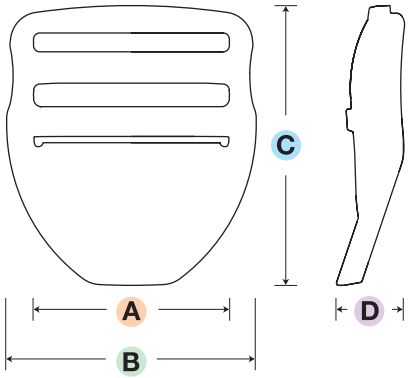


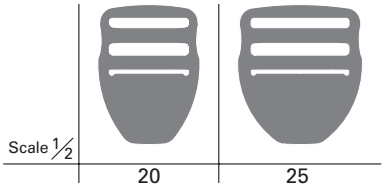

New

## LH-GYC 織帶夾 POM

- Backpack chest strap adjuster.
- Quickly attaches fixed webbing.

- 背包胸帶調節扣。
- 可快速連接織帶。

| CODE | SIZE | A | B | C | D | E |
|---|---|---|---|---|---|---|
| LH10GYC | 10mm | 16 | 20 | 12 | 25 | 7 |

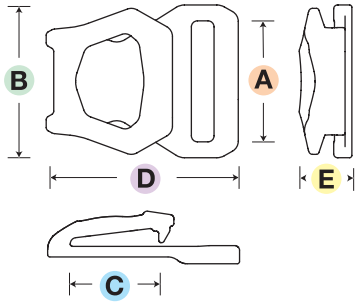


New

Photo LH-CS(L)

## LH-CS 織帶夾 POM

- Backpack chest strap adjuster.
- New hook design holds webbing tightly.
- The front design gives the item a slim appearance, with its shape allowing you to see the tape insertion easily.

- 背包胸帶調節扣。
- 新款設計可緊緊抓住織帶。
- 正面設計使產品外觀纖薄，輕易將織帶穿入。

| CODE | SIZE | A | B | C | D |
|---|---|---|---|---|---|
| LH15CS | 15mm | 16 | 25 | 19 | 10 |

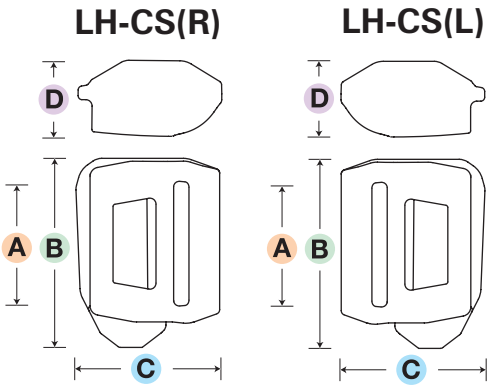

## LA-RH 分帶片 POM

- 3-way strap divider.
- 安全帽用，3 方向分帶片。

| CODE | SIZE | A | B | C | D |
|---|---|---|---|---|---|
| LA16RH | 16mm | 16 | 37 | 30 | 7 |

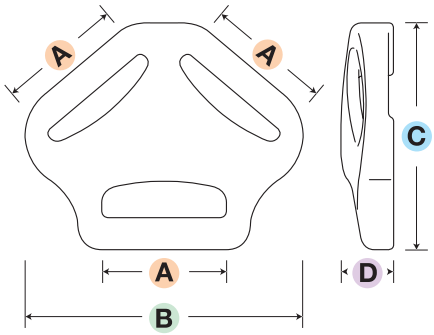


HAMMERLOC® 3way-Loop

## LA-PYB 分帶片 POM

- Originally designed for use in backpacks as a chest strap positioner.
- Perfect for use with the HAMMERLOC® product series.

- 背包用 3 方向分帶片。
- 依據 HAMMERLOC® 設計理念，背包前面的織帶可任意調整位置。

| CODE | SIZE | A | B | C | D | E |
|---|---|---|---|---|---|---|
| LA25PYB | 25mm | 21 | 30 | 26 | 39 | 6 |

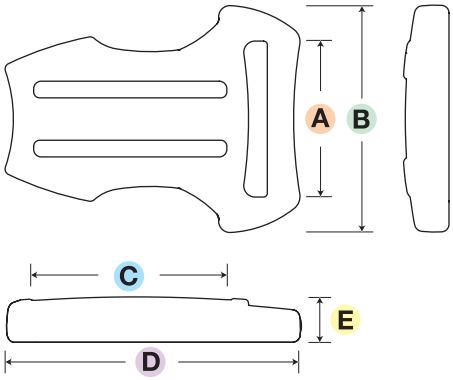

## LT-K 方型環 POM

- High-strength, multi-purpose loop.
- 耐強度的多功能方型環。

| CODE | SIZE | A | B | C | D | |
|---|---|---|---|---|---|---|
| LT15K | 15mm | 16 | 23 | 15 | 5 | ● Optional item |
| LT20K | 20mm | 21 | 29 | 17 | 5 | |
| LT25K | 25mm | 26 | 35 | 17 | 6 | |
| LT30K | 30mm | 31 | 40 | 24 | 6 | |
| LT38K | 38mm | 39 | 49 | 24 | 7 | |
| LT40K | 40mm | 40 | 51 | 24 | 7 | ● Optional item |
| LT50K | 50mm | 51 | 62 | 25 | 8 | |
| LT60K | 60mm | 60 | 75 | 30 | 9 | |

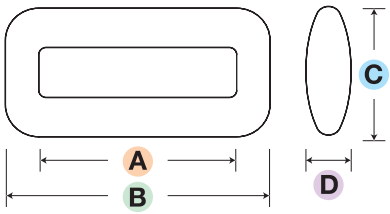

## LH-E 方型環 POM

- Standard, multi-purpose loop.
- 多功能方型環。

| CODE | SIZE | A | B | C | D | |
|---|---|---|---|---|---|---|
| LH18E | 18mm | 19 | 25 | 14 | 3 | |
| LH20E | 20mm | 21 | 28 | 14 | 3 | |
| LH25E | 25mm | 26 | 33 | 14 | 3 | |
| LH30E | 30mm | 31 | 39 | 16 | 3 | |
| LH38E | 38mm | 39 | 48 | 17 | 4 | |
| LH40E | 40mm | 41 | 50 | 17 | 4 | ● Optional item |
| LH50E | 50mm | 51 | 60 | 17 | 4 | |

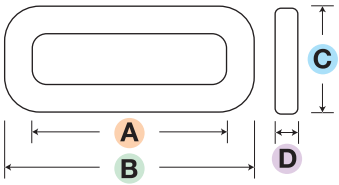

## LT-TG 方型環 POM

- High-strength, narrow opening prevents webbing from twisting.
- 防皺調整扣。

| CODE | SIZE | A | B | C | D |
|---|---|---|---|---|---|
| LT15TG | 15mm | 16 | 23 | 11 | 5 |
| LT20TG | 20mm | 20 | 28 | 12 | 5 |
| LT25TG | 25mm | 26 | 35 | 16 | 6 |
| LT38TG | 38mm | 39 | 49 | 18 | 7 |
| LT50TG | 50mm | 51 | 62 | 20 | 8 |

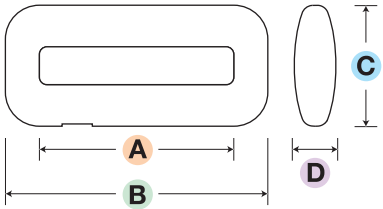

## LA-S 日型環

POM

- Standard, multi-purpose 3-bar adjuster.
- 多功能日型環。

| CODE | SIZE | A | B | C | D |
|---|---|---|---|---|---|
| LA20S | 20mm | 21 | 27 | 22 | 6 |
| LA25S | 25mm | 26 | 32 | 25 | 6 |
| LA30S | 30mm | 31 | 38 | 28 | 6 |
| LA38S | 38mm | 39 | 48 | 32 | 7 |
| LA40S | 40mm | 40 | 50 | 32 | 7 |
| LA50S | 50mm | 51 | 61 | 40 | 8 |
| LA60S | 60mm | 61 | 72 | 37 | 9 |

● Optional item

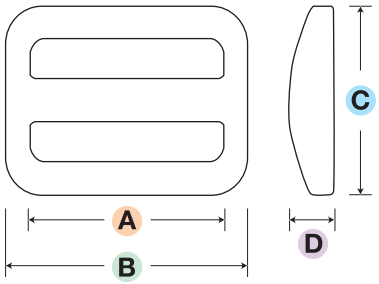

## LH-W 日型環

POM

- Reduce tape width from 38mm to 30mm.
- 可使用兩種織帶寬度。
  (30mm and 38mm)

| CODE | SIZE | A | B | C | D | E |
|---|---|---|---|---|---|---|
| LH38W | 38mm | 30 | 39 | 18 | 5 | 50 |

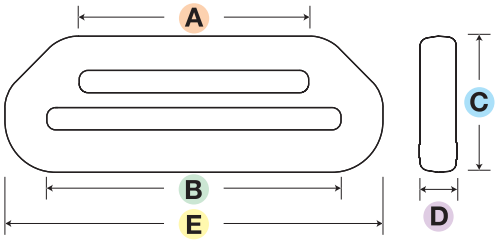

## LH-WJ 日型環

POM

- Reduce tape width from 38mm to 25mm.
- 2 側可結合不同寬度織帶設計。
  (25mm and 38mm)

| CODE | SIZE | A | B | C | D | E |
|---|---|---|---|---|---|---|
| LH38WJ | 38mm | 39 | 50 | 23 | 7 | 26 |

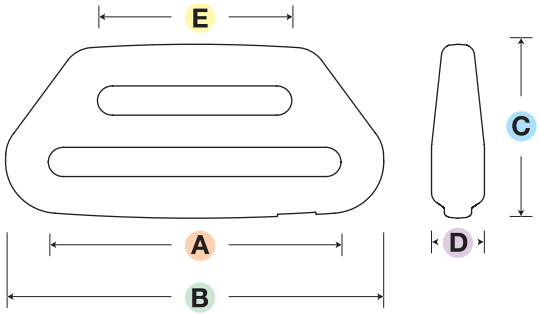

Logo

## LA-EJ 日型環

TPE

- TPE adjuster.
- Logo is available on the center bar.
- TPE 軟料材質。
- 中間橫桿可 LOGO 開發。

| CODE | SIZE | A | B | C | D |
|---|---|---|---|---|---|
| LA38EJ | 38mm | 40 | 52 | 24 | 5 |

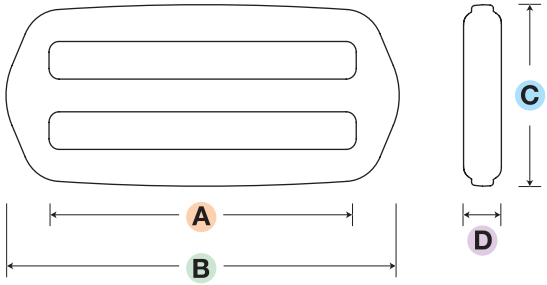

## Attachable

Push and Open

### LA-AXA / AXB 織帶夾 POM

- Can be easily attached to many different kinds of pouches.
- Annex Clip fits a wide variety of webbing.
- 手機袋、小型袋類用。

| CODE | SIZE | A | B | C | D | |
|---|---|---|---|---|---|---|
| LA25AXA | 25mm | 26 | 30 | 54 | 12 | ● for thick tape |
| LA25AXB | 25mm | 26 | 30 | 54 | 12 | ● for thin tape |

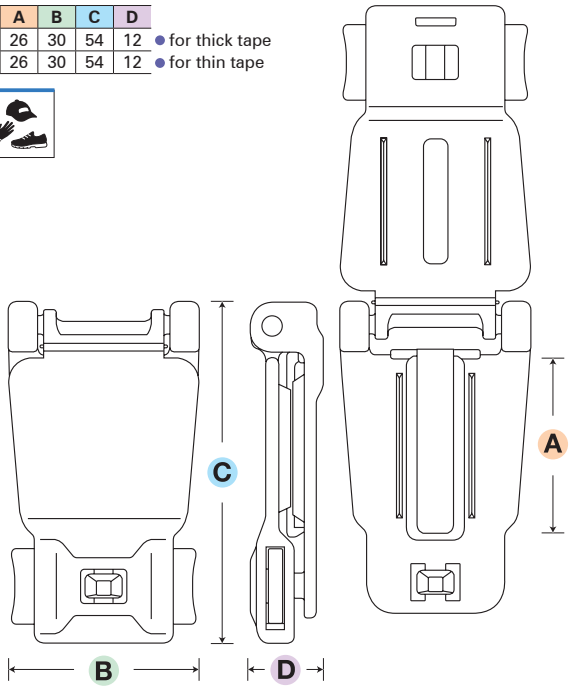

### LH-SG 織帶夾 POM

- Quickly attaches fixed webbing.
- Designed to hold down any loose webbing.
- 織帶夾。

| CODE | SIZE | A | B | C | D |
|---|---|---|---|---|---|
| LH20SG | 20mm | 20 | 11 | 24 | 8 |
| LH25SG | 25mm | 25 | 12 | 29 | 9 |
| LH38SG | 38mm | 38 | 13 | 43 | 12 |
| LH50SG | 50mm | 50 | 15 | 55 | 13 |

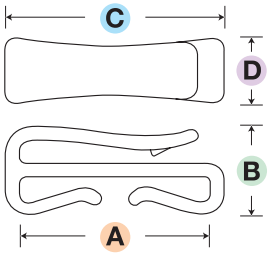


## Piping-Slider

### LA-PS 織帶夾 POM

- Backpack chest strap adjuster for 3.5mm piping.
- 易於調整肩帶。
- 適用 3.5mm Piping。

| CODE | SIZE | A | B | C | D | E |
|---|---|---|---|---|---|---|
| LA20PS | 20mm | 22 | 20 | 26 | 3 | 5 |

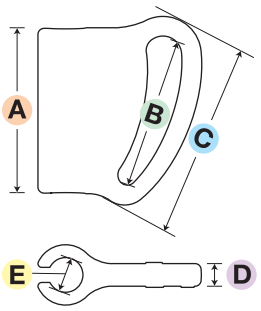

## Plastic Spring

## LN-SA 旋轉鉤 POM

- Fattened Tongue allows for easier release.
- Compact and simple design.

- 容易開啟。
- 俐落外型設計。

| CODE | SIZE | A | B | C | D |
|---|---|---|---|---|---|
| LN20SA | 20mm | 21 | 28 | 54 | 14 |
| LN25SA | 25mm | 26 | 34 | 54 | 14 |
| LN38SA | 38mm | 39 | 48 | 65 | 16 |

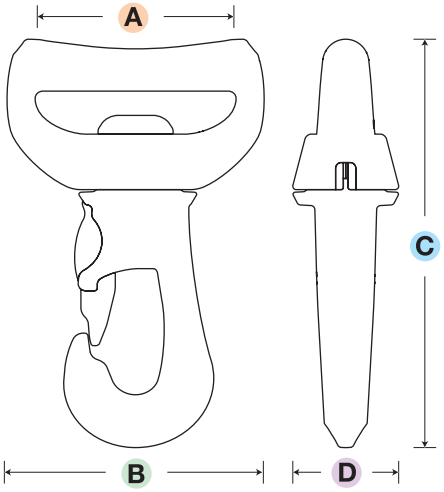


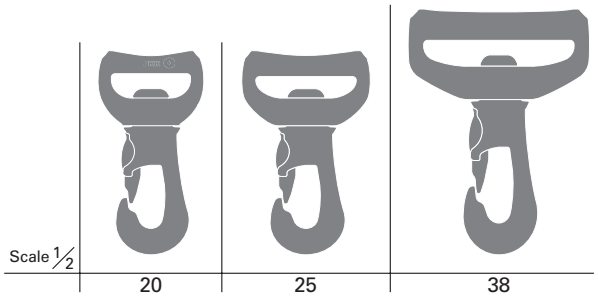


## Plastic Spring

## LN-ALK 旋轉鉤 POM

- High-strength designed.
- Quiet retation.

- 加強堅固性。
- 靜音設計 360 度旋轉。

| CODE | SIZE | A | B | C | D |
|---|---|---|---|---|---|
| LN38ALK | 38mm | 39 | 48 | 70 | 20 |

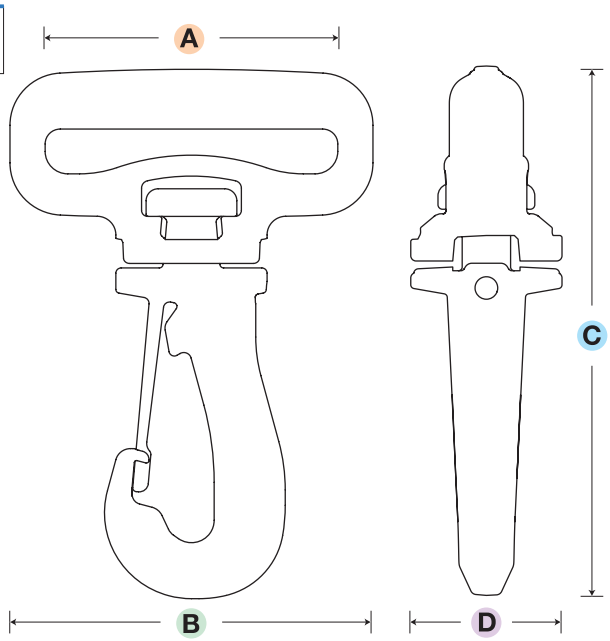

## Metal Spring

### LN-SM 旋轉鉤

Holder: POM Hook: PA

- Compact, metal spring design ensures a secure latch and increased strength.
- Special material combination delivers a smooth, quiet rotation.

- 金屬檔片可增加扣具使用強度。
- 俐落外型設計。
- 兩種塑料結合，使操作時更順暢無聲。

| CODE | SIZE | A | B | C | D |
|---|---|---|---|---|---|
| LN20SM | 20mm | 21 | 28 | 56 | 16 |
| LN25SM | 25mm | 26 | 33 | 56 | 16 |
| LN38SM | 38mm | 39 | 46 | 57 | 16 |

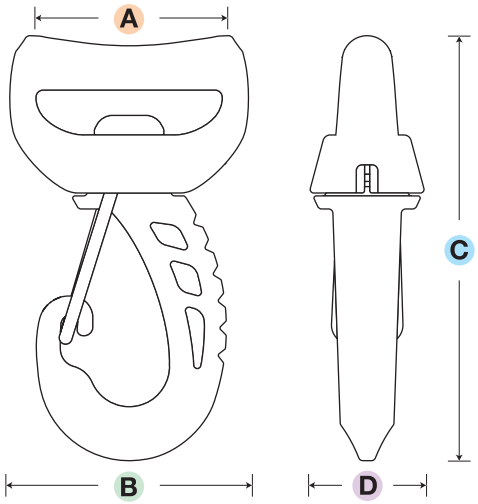


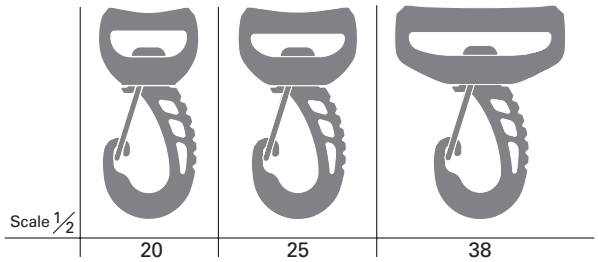


## Plastic Spring

### LN-AS 旋轉鉤

POM

- Integral molding technique offers high strength with no assembly process.
- Quiet rotation.

- 堅固設計，一體成型。
- 無噪音旋轉勾。

| CODE | SIZE | A | B | C | D |
|---|---|---|---|---|---|
| LN20AS | 20mm | 21 | 28 | 55 | 14 |
| LN25AS | 25mm | 26 | 34 | 56 | 14 |
| LN38AS | 38mm | 39 | 48 | 65 | 16 |

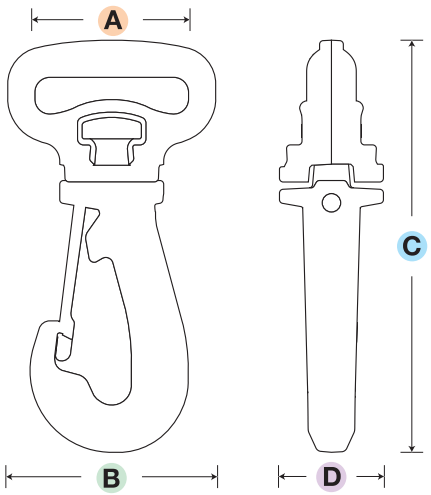


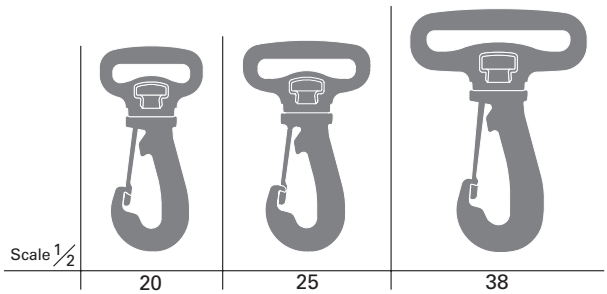

## Metal Spring

### LN-M1S 旋轉鉤 POM

- Steel spring latch provides extra strength.
- Unique contoured, streamline shape allows for easy release and quiet rotation.

- 金屬檔片增加扣具使用強度。
- 流線型外觀符合人體工學設計。
- 防噪音設計的旋轉勾。

| CODE | SIZE | A | B | C | D |
|---|---|---|---|---|---|
| LN20M1S | 20mm | 21 | 31 | 58 | 13 |
| LN38M1S | 38mm | 39 | 51 | 66 | 15 |

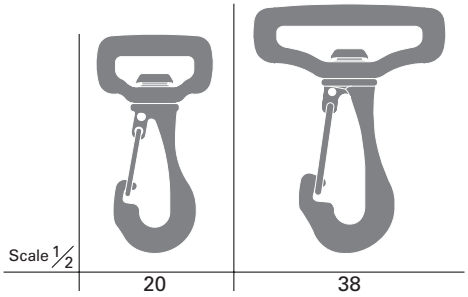


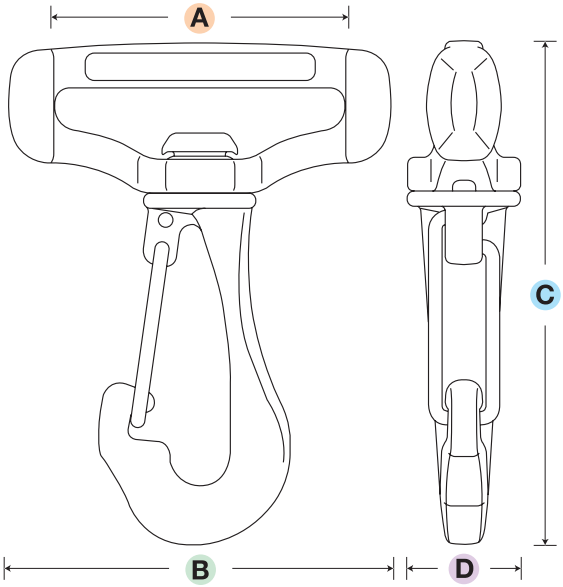


## Metal Spring

### LN-M2S 旋轉鉤 POM

- Steel spring latch provides extra strength.
- Unique contoured, streamline shape allows for easy release and quiet rotation.

- 金屬檔片增加扣具使用強度。
- 流線型外觀符合人體工學設計。
- 防噪音設計的旋轉勾。

| CODE | SIZE | A | B | C | D |
|---|---|---|---|---|---|
| LN38M2S | 38mm | 39 | 51 | 66 | 15 |

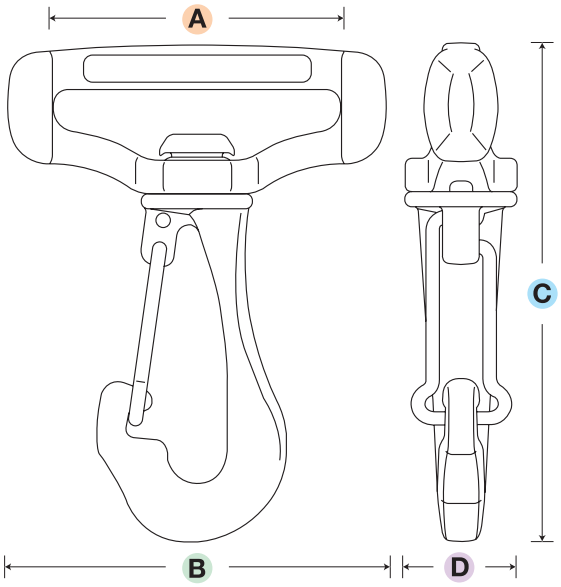

## Plastic Spring

### LN-ML 旋轉鉤 POM

- Unique contoured, streamline shape allows for easy release and quiet rotation.
- Plastic spring.
- 與 LN-M1S 外觀相同的全塑膠旋轉勾。

| CODE | SIZE | A | B | C | D |
|---|---|---|---|---|---|
| LN38ML | 38mm | 39 | 51 | 66 | 15 |
| LN50ML | 50mm | 51 | 62 | 69 | 15 |

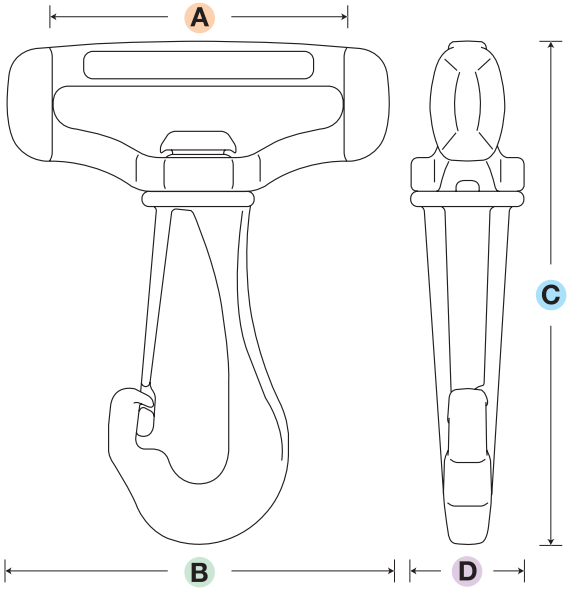


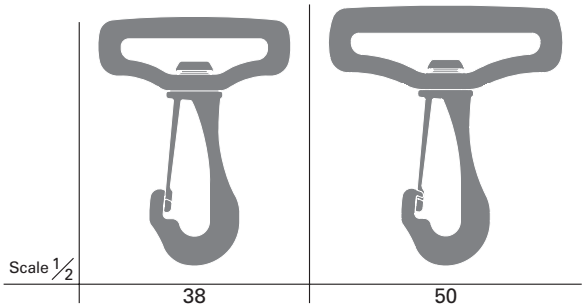


## Swivel & Rotate

### LN-AR1 旋轉鉤 POM

- High-strength design that both rotates and swivels.
- 加強堅固性。
- 可前後擺動及 360 度旋轉。

| CODE | SIZE | A | B | C | D |
|---|---|---|---|---|---|
| LN20AR1 | 20mm | 21 | 29 | 61 | 14 |
| LN25AR1 | 25mm | 26 | 34 | 61 | 14 |
| LN30AR1 | 30mm | 31 | 40 | 73 | 17 |
| LN38AR1 | 38mm | 39 | 49 | 73 | 17 |

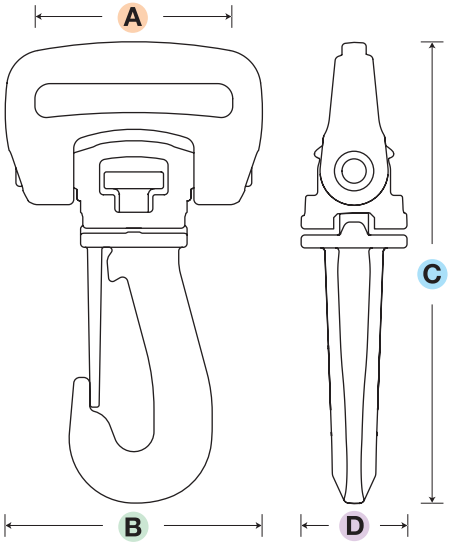


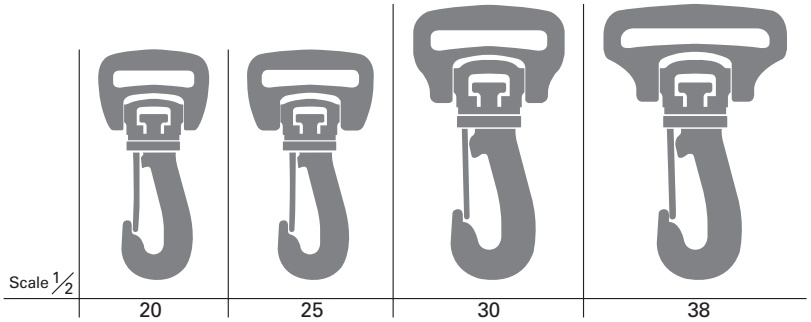

## Swivel & Rotate

PA Sleeve

# LN-RE

旋轉鉤

**POM**

- Specially designed PA sleeve reduces friction noise.
- Recommend for use with the LD-RE D-ring.

- 加強堅固性。
- YKK 獨特設計，可前後擺動及 360 度旋轉。
- 靜音設計。
- 高堅固性。

| CODE | SIZE | A | B | C | D |
|---|---|---|---|---|---|
| LN50RE | 50mm | 51 | 63 | 66 | 19 |

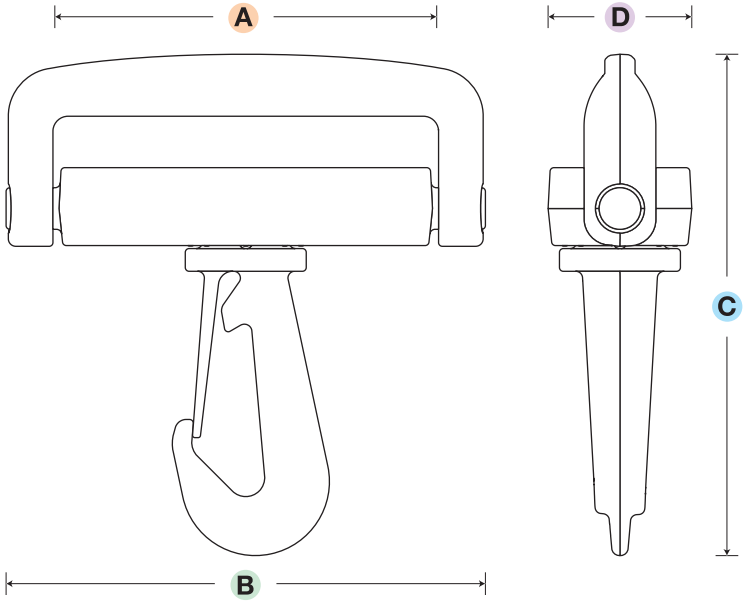

## LF-CH 旋轉鉤 POM

- Attached ring chain helps dissipate excessive stress.
- Suitable for hanging garment cases.

- 底部環扣設計可緩和壓力。
- 適用於服裝包。

| CODE | SIZE | A | B | C | D |
|---|---|---|---|---|---|
| LF20CH | 20mm | 21 | 29 | 85 | 20 |

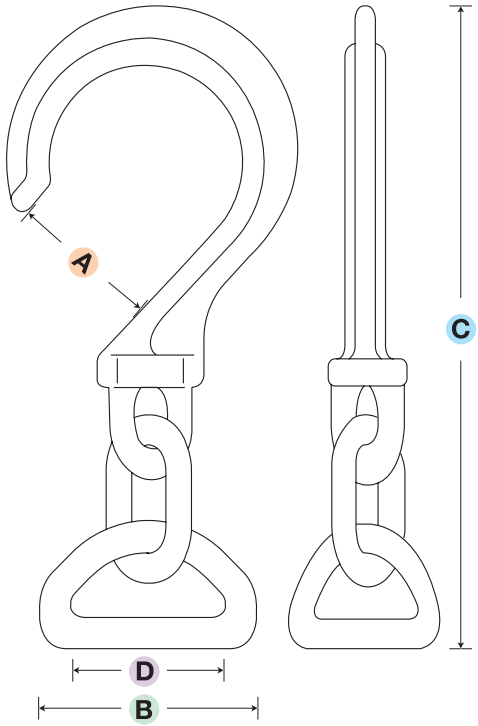

## LF-HA 旋轉鉤 POM

- Durable design can be twisted up to 90 degrees.
- Suitable for hanging garment cases.

- 90 度旋轉掛勾。
- 適用於服裝包。

| CODE | SIZE | A | B | C | D | E |
|---|---|---|---|---|---|---|
| LF20HA | 20mm | 21 | 30 | 90 | 21 | 14 |

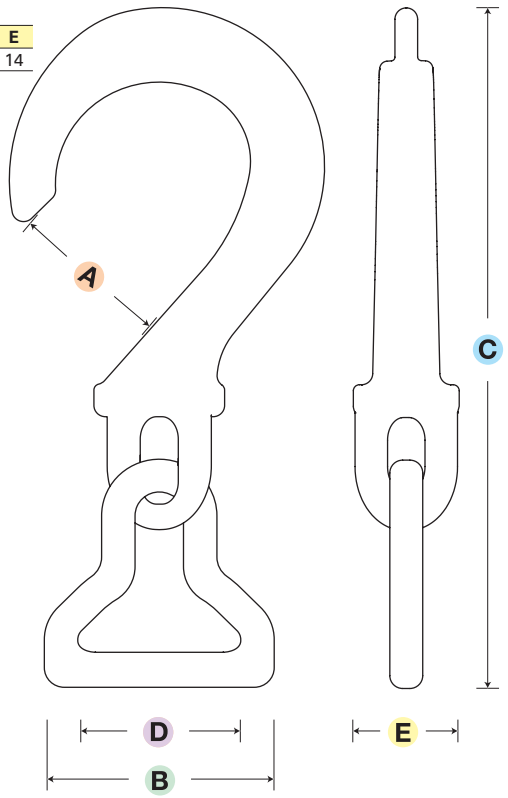

## LN-SX 旋轉鉤 POM

- Grooved slide lever offers easy manipulation.
- Recommend for use in low-profile applications.
- Ideal for key ring attachments.

- 符合手指流線設計。
- 輕便設計。
- 方便於與扣環連接。

| CODE | SIZE | A | B | C | D |
|---|---|---|---|---|---|
| LN10SX | 10mm | 11 | 21 | 57 | 13 |
| LN15SX | 15mm | 16 | 23 | 63 | 13 |
| LN20SX | 20mm | 21 | 28 | 64 | 13 |

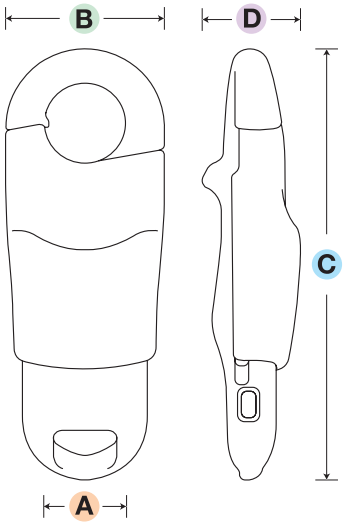


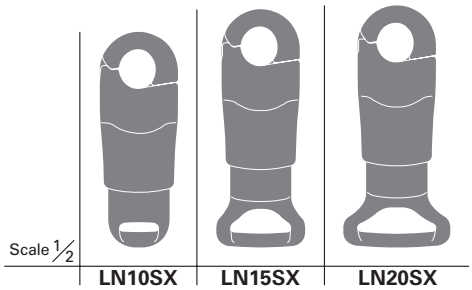

## LN-KH 旋轉鉤 POM

- Small size, great for inside bag application.
- 小尺寸掛勾 . 亦適合內袋使用。

| CODE | SIZE | A | B | C | D |
|---|---|---|---|---|---|
| LN13KH | 13mm | 14 | 19 | 44 | 8 |

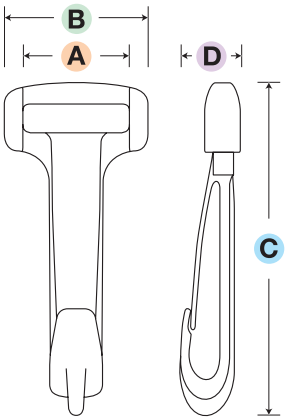

## Swivel & Rotate

### LN-ZR 旋轉鉤 POM

- Rounded shape is easier to hold and use.
- Great for key ring attachments.

- 符合手指流線設計。
- 方便於與扣環連接。

| CODE | SIZE | A | B | C | D |
|---|---|---|---|---|---|
| LN13ZR | 13mm | 14 | 18 | 47 | 12 |

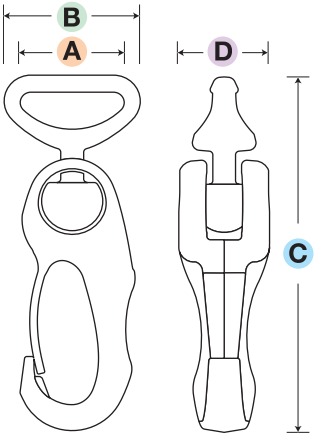


## Swivel & Rotate

### LN-Z 旋轉鉤 POM

- Rounded shape is easier to hold and use.
- Great for key ring attachments.
- Hook and ring can rotate smoothly in all directions.

- 可 360° 旋轉。

| CODE | SIZE | A | B | C |
|---|---|---|---|---|
| LN09Z | 09mm | 9 | 13 | 52 |
| LN15Z | 15mm | 15 | 20 | 52 |

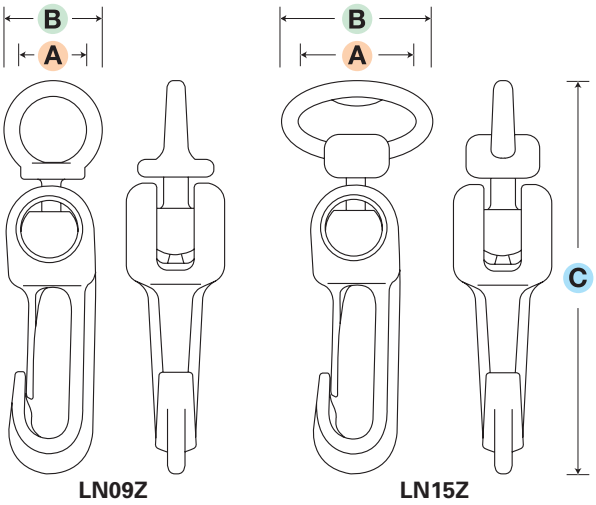

## LD-KN

D型環

POM

- Ring remains steady to limit movement of the snap hook.
- Narrow opening prevents tape gathering on one side.

- 可抑制旋轉鉤的搖晃。
- 防止織帶偏離的設計。
- 科技感造型。

| CODE | SIZE | A | B | C | D |
|---|---|---|---|---|---|
| LD20KN | 20mm | 21 | 30 | 27 | 5 |

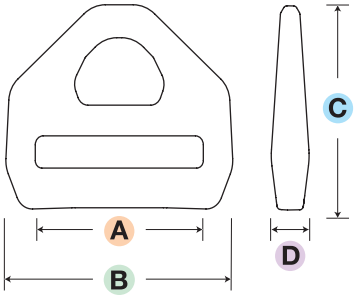

## LD-S

D型環

POM

- Ring remains steady to limit movement of the snap hook.
- Narrow opening prevents tape gathering on one side.

- 可抑制旋轉鉤的搖晃。
- 防止織帶偏離的設計。

| CODE | SIZE | A | B | C | D |
|---|---|---|---|---|---|
| LD20S | 20mm | 21 | 29 | 25 | 6 |
| LD25S | 25mm | 26 | 35 | 26 | 6 |
| LD30S | 30mm | 31 | 41 | 28 | 7 |
| LD38S | 38mm | 39 | 50 | 30 | 7 |

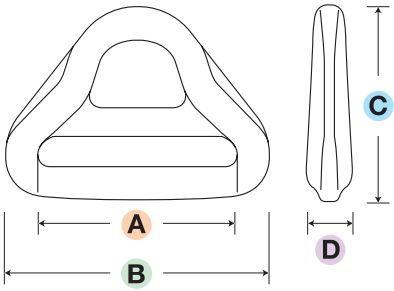

## LD-E

D型環

POM

- Two of these rings can be used as a strap adjuster.
- 同時使用兩個 D 型環，即有樓梯扣的功能。

| CODE | SIZE | A | B | C | D | |
|---|---|---|---|---|---|---|
| LD15E | 15mm | 16 | 23 | 19 | 3 | ● Optional item |
| LD20E | 20mm | 21 | 29 | 25 | 5 | |
| LD25E | 25mm | 26 | 35 | 25 | 6 | |
| LD30E | 30mm | 31 | 40 | 28 | 6 | |
| LD38E | 38mm | 39 | 49 | 31 | 6 | |
| LD40E | 40mm | 41 | 51 | 32 | 8 | ● Optional item |
| LD50E | 50mm | 51 | 62 | 33 | 7 | |

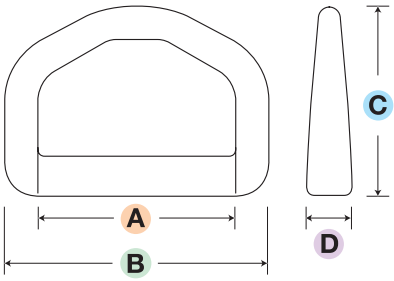

## LD-K

D型環

POM

- Ring remains steady to limit movement of the snap hook.
- Narrow opening prevents tape gathering on one side.

- 可抑制旋轉鉤的搖晃。
- 防止織帶偏離的設計。

| CODE | SIZE | A | B | C | D |
|---|---|---|---|---|---|
| LD20K | 20mm | 21 | 29 | 26 | 5 |
| LD25K | 25mm | 26 | 34 | 27 | 6 |
| LD30K | 30mm | 31 | 40 | 27 | 6 |
| LD38K | 38mm | 39 | 49 | 31 | 6 |
| LD50K | 50mm | 51 | 62 | 33 | 7 |

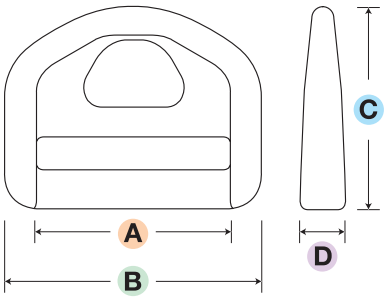

## LD-R

D型環

POM

- Sleek, round design.
- 半圓光滑 D 環。

| CODE | SIZE | A | B | C | D |
|---|---|---|---|---|---|
| LD25R | 25mm | 26 | 34 | 23 | 4 |
| LD30R | 30mm | 31 | 40 | 26 | 5 |
| LD38R | 38mm | 39 | 48 | 30 | 5 |

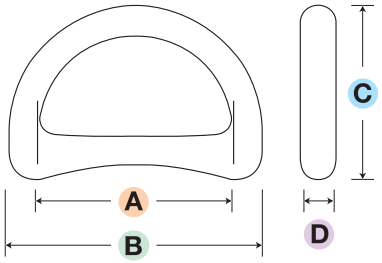

## LD-RE

D型環

POM

- Ring remains steady to limit movement of the snap hook.
- Narrow opening prevents tape gathering on one side.
- 可抑制旋轉鉤的搖晃。
- 防止織帶偏離的設計。

| CODE | SIZE | A | B | C | D |
|---|---|---|---|---|---|
| LD50RE | 50mm | 51 | 59 | 30 | 8 |

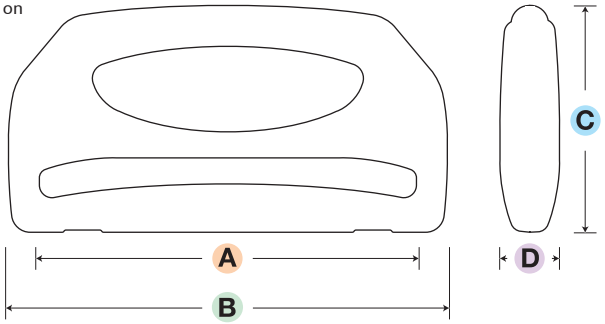


Twist

## LD-TW

D型環

POM

- Twisted ring.
- 掛勾環，拉環。

| CODE | SIZE | A | B | C | D |
|---|---|---|---|---|---|
| LD25TW | 25mm | 26 | 38 | 37 | 20 |
| LD30TW | 30mm | 31 | 43 | 37 | 20 |
| LD38TW | 38mm | 39 | 51 | 37 | 20 |

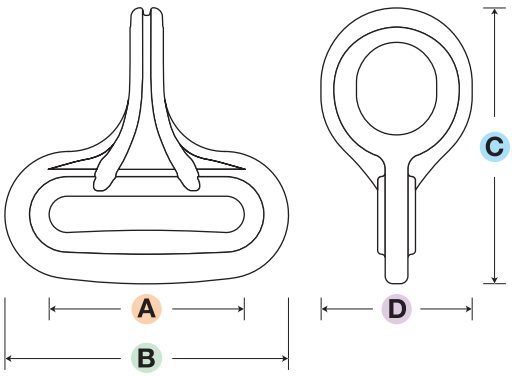

## Plastic Spring

### LC03WL 繩索扣 POM

- Used to open the main compartment of a backpack.
- One handed cord operation to loosen quickly and easily.
- The front features a new curved design that fits the shape of your finger, enabling the cord to easily be tightened.

- 可單手操作，輕易開啟背包的主隔層。
- 正面弧形新款設計，符合人體工學，可輕鬆收緊繩索。

| CODE | SIZE | A | B | C | D | E |
|---|---|---|---|---|---|---|
| LC03WL | 3mm | 10 | 22 | 31 | 10 | 10 |

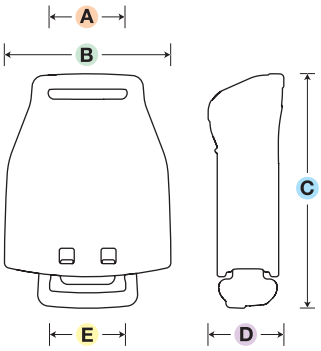

## Metal Spring

### LC05PC 繩索扣 PA

- Webbing space designed.
- Easy adjustment designed.
- Needle detector compatiable plastic hardware.

- 可穿織帶孔設計小尺寸。
- 操作便利設計。

| CODE | SIZE | A | B | C | D |
|---|---|---|---|---|---|
| LC05PC | 5mm | 4 | 26 | 23 | 9 |

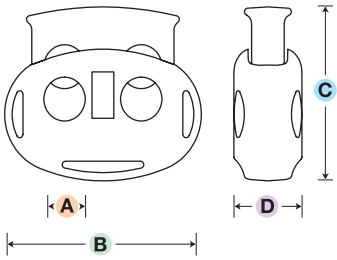


## Metal Spring

### LC05PD 繩索扣 PA

- Webbing space designed.
- Easy adjustment designed.
- Small and lightweight.
- Needle detector compatiable plastic hardware.

- 可穿織帶孔設計小尺寸。
- 操作便利設計。

| CODE | SIZE | A | B | C | D |
|---|---|---|---|---|---|
| LC05PD | 5mm | 4 | 19 | 16 | 8 |

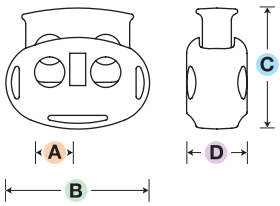

- The LC ( All plastics) will not rust or react to needle detectors. (Standard cord diameter : $\phi$5mm)
- Please ask our sales staff for the availability of colors and metal platings.
- Some cord types may not work well; therefore, you must test them with the cord end before using them.
- LC 系列為全塑鋼扣具。
- 適用於檢針機對策品及防鏽產品，請使用直徑5mm的繩子。
- 如需其他顏色及金屬表鍍請聯繫銷售人員。
- 因繩子種類不同，建議使用前先搭配測試。

**Print** Only available in PA.
印刷：僅適用於尼龍材質。

Plastic Spring

## LC05SR 繩索扣 POM / PA

* Needle detector compatible plastic hardware.

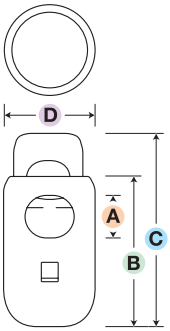


| CODE | SIZE | A | B | C | D |
|---|---|---|---|---|---|
| LC05SR | 5mm | 5 | 20 | 25 | 12 |

Plastic Spring

## LC05KW 繩索扣 POM / PA

* Needle detector compatible plastic hardware.

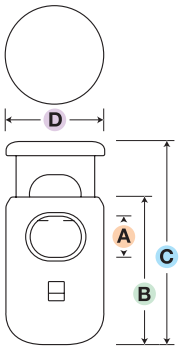


| CODE | SIZE | A | B | C | D |
|---|---|---|---|---|---|
| LC05KW | 5mm | 5 | 20 | 27 | 14 |

Plastic Spring

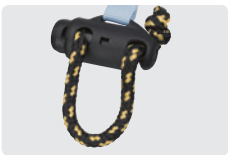

## LC05HW 繩索扣 POM

- Fixed body enables single-handed cord length adjustment.
- Lower hook retains other cord end.
- Side slot allows for easy webbing attachment that can be sewn to the garment.
- 可用織帶固定、兼具掛繩功能、單手操作即可。
- 如同 LC03PE, 側邊可穿織帶固定。

* Needle detector compatible plastic hardware.

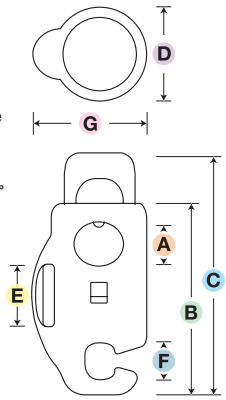


| CODE | SIZE | A | B | C | D | E | F | G |
|---|---|---|---|---|---|---|---|---|
| LC05HW | 5mm | 5 | 25 | 31 | 12 | 8 | 5 | 15 |

Plastic Spring

## LC05RW 繩索扣 POM

* Needle detector compatible plastic hardware.

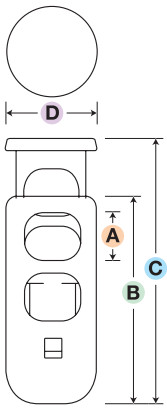


| CODE | SIZE | A | B | C | D |
|---|---|---|---|---|---|
| LC05RW | 5mm | 6 | 28 | 35 | 12 |

Plastic Spring

## LC05KH 繩索扣 POM

- Fixed body enables single-handed cord length adjustment.
- Side slot allows for easy webbing attachment that can be sewn to the garment.
- 可固定且單手操作即可。
- 如同 LC03PE, 側邊可穿織帶固定。

* Needle detector compatible plastic hardware.

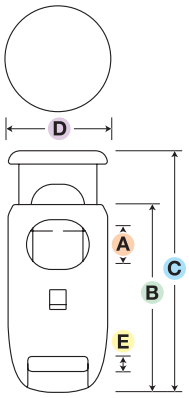


| CODE | SIZE | A | B | C | D | E |
|---|---|---|---|---|---|---|
| LC05KH | 5mm | 5 | 25 | 32 | 14 | 2 |

# Cord Stopper 繩索扣

## Plastic Spring

### LC05SC 繩索扣 POM

- Small and flat.
- 輕薄型繩索扣。

* Needle detector compatible plastic hardware.

| CODE | SIZE | A | B | C | D | E |
|---|---|---|---|---|---|---|
| LC05SC | 5mm | 5 | 19 | 27 | 15 | 8 |

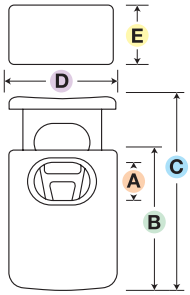


## Plastic Spring

### LC05SB 繩索扣 POM

- A round, compact design made entirely of plastic.
- 全塑膠製圓型精巧設計。

* Needle detector compatible plastic hardware.

| CODE | SIZE | A | B | C | D |
|---|---|---|---|---|---|
| LC05SB | 5mm | 5 | 16 | 27 | 18 |

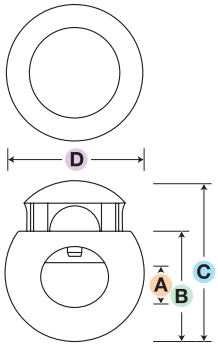


## Plastic Spring

### LC05WC 繩索扣 POM

* Needle detector compatible plastic hardware.

| CODE | SIZE | A | B | C | D | E |
|---|---|---|---|---|---|---|
| LC05WC | 5mm | 6 | 27 | 36 | 16 | 9 |

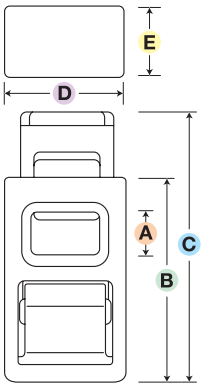


## Plastic Spring

### LC05WF 繩索扣 POM

- Used for double cords.
- Movable inner mechanism allows for easier cord insertion.
- 適用雙繩索。
- 公扣可取出，較易穿入繩索。

* Needle detector compatible plastic hardware.

| CODE | SIZE | A | B | C | D |
|---|---|---|---|---|---|
| LC05WF | 5mm | 20 | 28 | 32 | 7 |

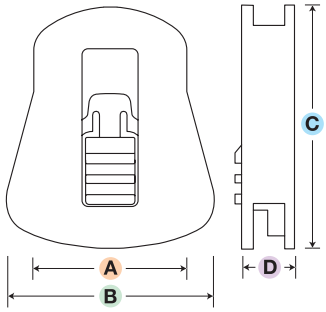


## Metal Spring

### LC03PE 繩索扣 TPE

- Double sided slot allows for easy webbing attachment that can be sewn to the garment.
- Side slots allow for easy webbing attachment that can be sewn to the garment.
- 扣具織帶扣孔設計，可與成衣或布料固定結合。
- 側邊可穿織帶固定。

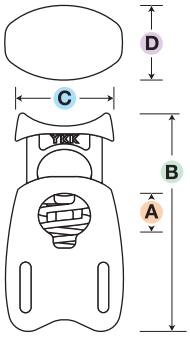


| CODE | SIZE | A | B | C | D |
|---|---|---|---|---|---|
| LC03PE | 3mm | 5 | 29 | 13 | 10 |

# Cord Holder 耳機孔

Sewable

## LC05UG 耳機孔

TPE

- Sewn directly onto garment and allows air flow through the openings.
- The bungee cord, which is going through the hole in this cord holder, helps to hold the hydration tube steady.
- Allows for easy routing of the headphone through your gament or bag.
- Cord is easily fastened in side slots.
- 穿過兩孔可固定耳機線。

| CODE | SIZE | A | B | C | D |
|---|---|---|---|---|---|
| LC05UG | 5mm | 32 | 46 | 6 | 5 |

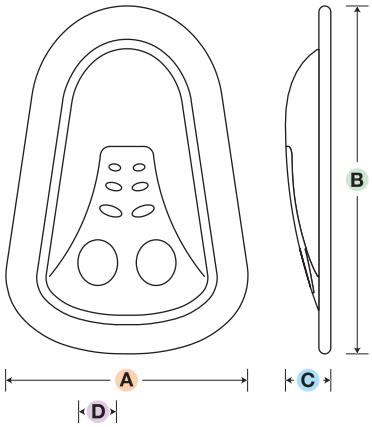


Sewable

LC02US LC10US

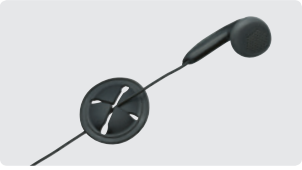

## LC02US / LC10US 耳機孔

TPE

- Sewn directly onto garment and allows air flow through the openings.
- Offers easy access to run hydration tubes (LC10US) or headphone wires.
- Cord is easily fastened in side slots.

LC10US
- 可車縫耳機孔。
- 可固定運動用背包型水壺吸管孔。
- 可車縫於布料上。

LC02US
- 繩索穿入十字孔固定。
- 可車縫於布料上。

| CODE | SIZE | A | B | C |
|---|---|---|---|---|
| LC02US | 2mm | 26 | 24 | 30 |
| LC10US | 10mm | 40 | 36 | 50 |

LC02US

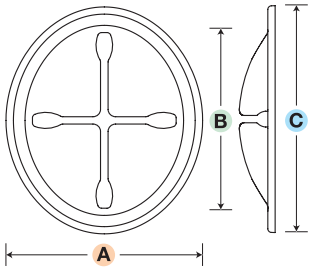


LC10US

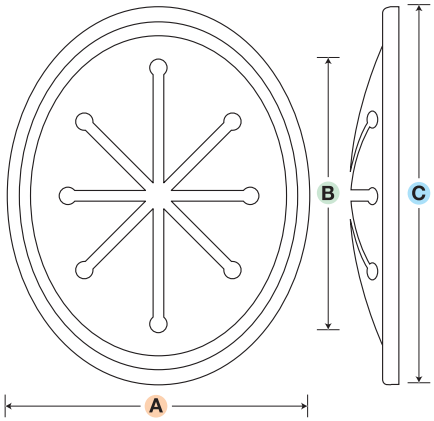

Sewable

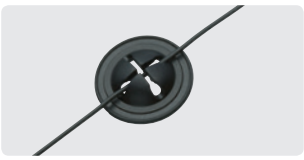

## LC02UC 耳機孔

TPE

- Sewn directly onto garment and allows air flow through the openings.
- The bungee cord, which is going through the hole in this cord holder, helps to hold the hydration tube steady.
- Allows for easy routing of the headphone through your garment or bag.
- Cord is easily fastened in side slots.

- 繩索穿入十字孔固定。
- 可車縫於布料上。

| CODE | SIZE | A | B |
|---|---|---|---|
| LC02UC | 2mm | 24 | 5 |

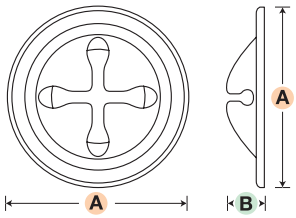


Sewable

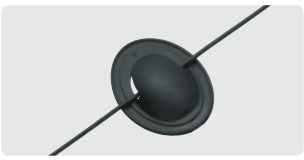

## LC02UH2 耳機孔

TPE

- Sewn directly onto garment.
- Cord is securely fastened using the slotted opening.

- 適用於掛上直徑 2mm 的繩索，可車縫的耳機孔。

| CODE | SIZE | A | B | C |
|---|---|---|---|---|
| LC02UH2 | 2mm | 23 | 31 | 6 |

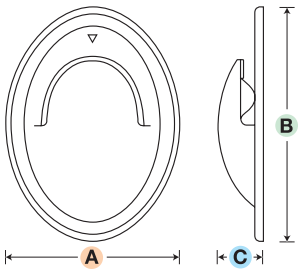


Sewable

## LC05EL 耳機孔

TPE

- Sewn directly onto garment.
- Can be used as a simple cord stopper when the cord is anchored through the top slot.

- 在成衣上縫製，可發揮簡易的繩索扣功能。

| CODE | SIZE | A | B | C |
|---|---|---|---|---|
| LC05EL | 5mm | 18 | 19 | 2 |

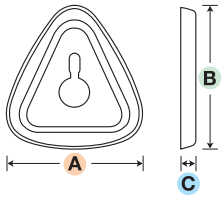

## ICE AXE Tool

# LE-AT

ICE AXE適用

**POM**

- Design Designed for an Ice AXE.
- Easily threaded, friction resistant.
- Lightweight due to POM material.

- ICE AXE 適用。
- 輕巧設計，可輕鬆穿過繩索，抵抗摩擦。
- 輕量，POM 塑料材質。

| CODE | SIZE | A | B | C | D |
|---|---|---|---|---|---|
| LE04AT | 4mm | 4 | 13 | 65 | 10 |

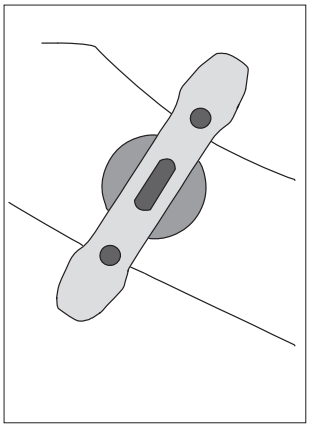

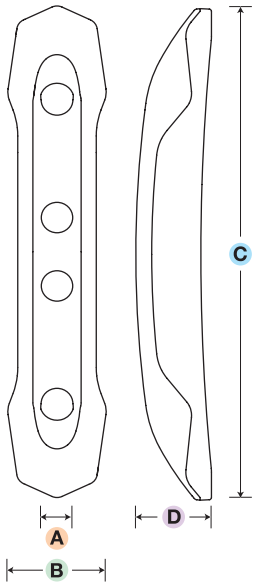

# Zipper Cover 拉鏈蓋

## ZIPCAP® Outer-Cap

### WZ-CO 拉鏈蓋 TPE

- Sewn directly onto garment over the top opening position of the zipper.
- Offers warter-repellency when used in conjunction with YKK's Water Repellent Zipper.

- 與 YKK 防水拉鏈搭配使用可增進防水效果。
- 可車縫於布料上。
- 大幅增進背包防水機能。

| CODE | SIZE | A | B | C | D | |
|---|---|---|---|---|---|---|
| WZ02CO | 2mm | 11 | 20 | 20 | 8 | ● for No.3 Coil Zipper |
| WZ03CO | 3mm | 15 | 23 | 26 | 8 | ● for No.5 Coil Zipper |
| WZ05CO | 5mm | 17 | 29 | 33 | 11 | ● for No.8 Coil Zipper |

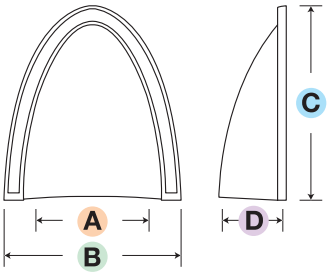


## ZIPCAP® Innerer-Cap

### WZ-SI / WZ05NI 拉鏈蓋 TPE

- Sewn between the fabric and the zipper.
- Offers warter-repellency when used in conjunction with YKK's Water Repellent Zipper.

- 與 YKK 撥水拉鏈搭配使用可提昇防水效果。
- 可車縫於布料及拉鏈之間。
- 適用於防水衣物。

| CODE | SIZE | A | B | C | D | |
|---|---|---|---|---|---|---|
| WZ02SI | 2mm | 10 | 19 | 18 | 7 | ● for No.3 Coil Zipper |
| WZ03SI | 3mm | 13 | 24 | 22 | 9 | ● for No.5 Coil Zipper |
| WZ05NI | 5mm | 18 | 30 | 28 | 11 | ● for No.8 Coil Zipper |

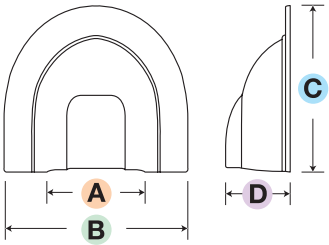


## Key Lock

Logo

### LZ05DLW 拉鏈蓋 TPE

- Sewn directly onto garment.
- Attaches to the end of YKK's DLW slider.

- 與 YKK DLW 拉頭結合使用之車縫片。

| CODE | SIZE | A | B | C | D | |
|---|---|---|---|---|---|---|
| LZ05DLW | 5mm | 12 | 42 | 35 | 11 | ● for No.5 Coil Zipper |

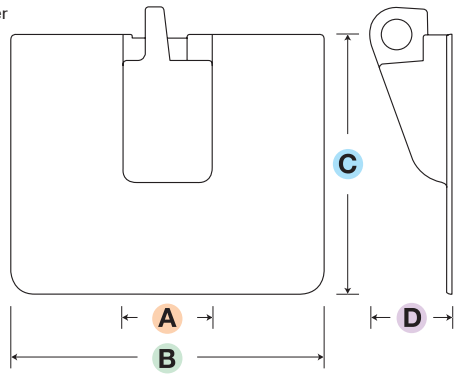

## LE03NK

繩尾扣
Plug: POM Socket: PC
Plug: PA Socket: TPE

Single Cord

- Cord end with non slip texture, allowing for easy grip.
- 繩索特殊安裝的小型繩尾扣。

| CODE | SIZE | A | B | C |
|---|---|---|---|---|
| LE03NK | 3mm | 9 | 13 | 7 |

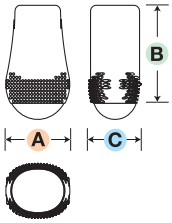

## LE05WA1

繩尾扣 POM

Double Cord

- Avoid string or attaching this item in cold temperatures as the material may become brittle.
- 存放倉庫或生產場所處於低氣溫時，此產品的壓槽連接處 (Hinge) 易於脆裂。

| CODE | SIZE | A | B | C | D |
|---|---|---|---|---|---|
| LE05WA1 | 5mm | 5 | 12 | 39 | 20 |

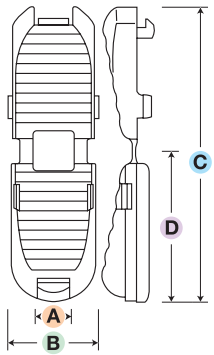

## LE03SV

繩尾扣 POM

Single Cord

- Single cord-end stopper is used with a bungee cord.
- Plunge and V-notch hold the body firmly together.
- Suitable for use as cord adjustment of outerwear.
- See picture below for cord attachment/assembly.
- 單繩索繩尾扣，適用於彈性或橡膠拉繩。

| CODE | SIZE | A | B | C | D |
|---|---|---|---|---|---|
| LE03SV | 3mm | 8 | 12 | 15 | 8 |

Hold and put in

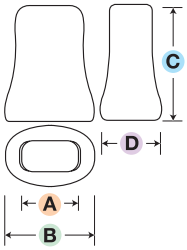

## LE03WV

繩尾扣 POM

Double Cord

- Double cord-end stopper is used with a bungee cord.
- Plunge and V-notch hold the body firmly together.
- Suitable for use as cord adjustment of outerwear.
- See picture below for cord attachment/assembly.
- 雙繩索繩尾扣，適用於彈性或橡膠拉繩。

| CODE | SIZE | A | B | C | D |
|---|---|---|---|---|---|
| LE03WV | 3mm | 10 | 13 | 14 | 7 |

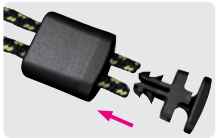

Hold and put in

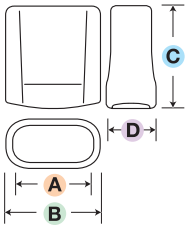

## LE03CMT

繩尾扣 PA

Single Cord

- Avoid string or attaching this item in cold temperatures as the material may become brittle.
- 存放倉庫或生產場所處於低氣溫時，此產品的壓槽連接處 (Hinge) 易於脆裂。

| CODE | SIZE | A | B | C | D |
|---|---|---|---|---|---|
| LE03CMT | 3mm | 4 | 13 | 38 | 19 |

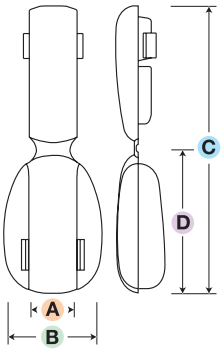

## LE01STT

繩尾扣 PA

Double Cord

- Use 3-4mm diameter synthetic cord having inner core.
- For double cord application.
- Avoid string or attaching this item in cold temperatures as the material may become brittle.
- 存放倉庫或生產場所處於低氣溫時，此產品的壓槽連接處 (Hinge) 易於脆裂。

| CODE | SIZE | A | B | C | D |
|---|---|---|---|---|---|
| LE01STT | 1mm | 7 | 18 | 40 | 20 |

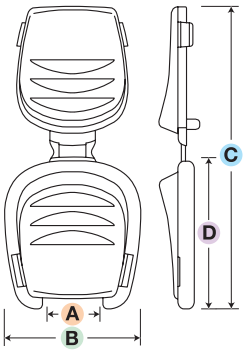

# Cord End 繩尾扣

## LE07CP 繩尾扣 PA

Single Cord End

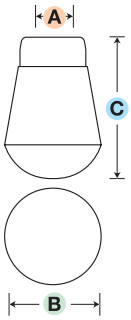


A : Cord opening dimension

A : 孔徑

| CODE | SIZE | A | B | C |
|---|---|---|---|---|
| LE07CP | 5mm | 5 | 12 | 19 |

## LE03PC 繩尾扣 PA

Double Cord End

- Avoid string or attaching this item in cold temperatures as the material may become brittle.
- 存放倉庫或生產場所處於低氣溫時，此產品的壓槽連接處 (Hinge) 易於脆裂。

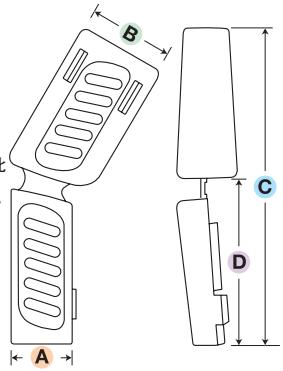


| CODE | SIZE | A | B | C | D |
|---|---|---|---|---|---|
| LE03PC | 3mm | 8 | 12 | 42 | 22 |

## LE05CE 繩尾扣 PA

Double Cord End

- Avoid string or attaching this item in cold temperatures as the material may become brittle.
- 存放倉庫或生產場所處於低氣溫時，此產品的壓槽連接處 (Hinge) 易於脆裂。

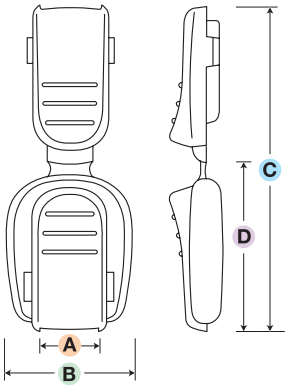


| CODE | SIZE | A | B | C | D |
|---|---|---|---|---|---|
| LE05CE | 5mm | 8 | 17 | 43 | 23 |

## LE03PB 繩尾扣 PA

Double Cord End

- Avoid string or attaching this item in cold temperatures as the material may become brittle.
- 存放倉庫或生產場所處於低氣溫時，此產品的壓槽連接處 (Hinge) 易於脆裂。

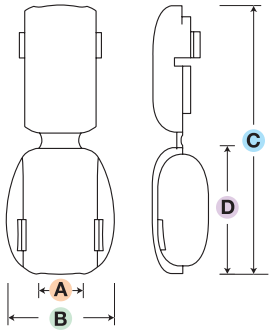


| CODE | SIZE | A | B | C | D |
|---|---|---|---|---|---|
| LE03PB | 3mm | 6 | 14 | 36 | 17 |

### Cord thickness for attachment: 繩尾扣的安裝範例

1. Place both ends of a cord in the guide.
2. Snap the mechanism together to lock it perfectly.

1. Fold over the edge of a cord. (Follow the directions below.)
2. Use a $\phi$3-4mm synthetic cord with an inner core.
3. Thermo-fix the cord edge to prevent fraying.

* Some cord types may not work well; therefore, you must test them with the cord end before using them.

1. 繩子兩端放入壓槽中。
2. 尾扣公母兩面直接按壓到固定。

1. 繩子兩端放入壓槽中。
2. 使用 3-4 mm 彈繩或繩子。
3. 繩子使用錢需熱切處理。

•因繩子種類不同，建議使用前先搭配測試。

LE01STT

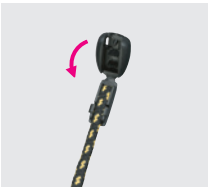

LE03CMT

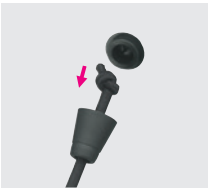

LE07CP

## LE02PA | 拉片扣 | PA

- Avoid string or attaching this item in cold temperatures as the material may become brittle.
- Attachable to variety of zipper pulls.
- Please check with your YKK representative.

- 存放倉庫或生產場所處於低氣溫時，此產品的壓槽連接處 (Hinge) 易於脆裂。
- 可掛在拉片孔上。

| CODE | SIZE | A | B | C | D |
|---|---|---|---|---|---|
| LE02PA | 2mm | 7 | 12 | 45 | 22 |

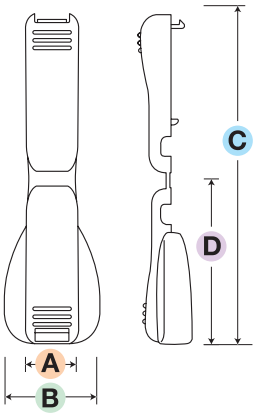

## IJ01SC | 吊牌扣 | PP

- Tag holder.
- Permanent closure for security.

- 吊牌扣。
- 穩固的扣合品質。

| CODE | SIZE | A | B | C |
|---|---|---|---|---|
| IJ01SC | 1mm | 24 | 17 | 6 |

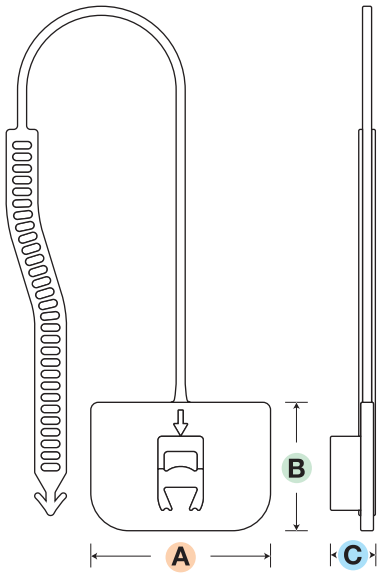

## 5BS SLIDER | 5BS AABL | 帽扣 POM

| CODE | SIZE | A | B | C |
|---|---|---|---|---|
| 5BS AABL | 5mm | 16 | 20 | 26 |

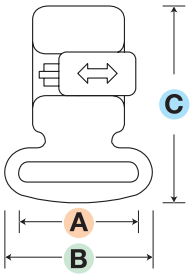


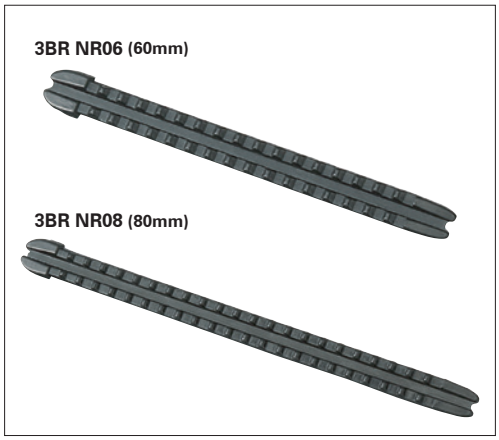


## 3BR RAIL | 3BR NR06 (60mm) / NR08 (80mm) | 帽扣 PA

Used in conjunction with the 5BS AABL.
Features
- Adjusts to any position with one touch.
- Strong locking function.
- Since plastic is used instead of metal rails, it is colorful, resistant to corrosion, and lightweight.

Usage
- Caps, pants, skirts, jackets, bags, shoes, etc.

Materials
- Sliders: POM
- Rail: PA

搭配 5BS AABL 使用
特色
- 可自由調整軌道的強度。
- 堅固的鎖合機能。
- 塑膠材質取代金屬軌道色彩豐富，防腐蝕，重量輕。

用途
- 帽子、長褲、裙子、夾克外套、皮包、鞋類等。

材質
- 拉頭：塑鋼。
- 軌道：尼龍。

| CODE | SIZE | A | B |
|---|---|---|---|
| 3BR NR06 | 60mm | 62 | 6 |
| 3BR NR08 | 80mm | 81 | 6 |

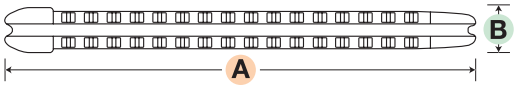

## IC20RY | 迴紋針 POM

| CODE | SIZE | A | B | C |
|---|---|---|---|---|
| IC20RY | 20mm | 29 | 33 | 2 |

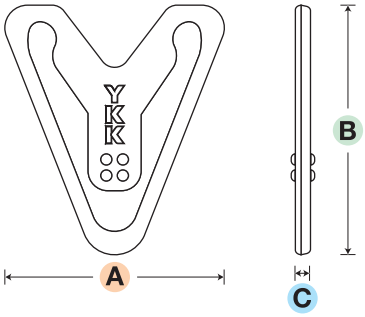

# Cord Insert Puller 繩索拉片

## CP0010A 繩索拉片 TPE

- Provides easy opening and closing of zippers.
- Reduced noise due to soft material.
- Cord is firmly attached during injection molding process.
- 輕鬆拉動
- 高強度及耐久性
- 1.5mm 雙繩

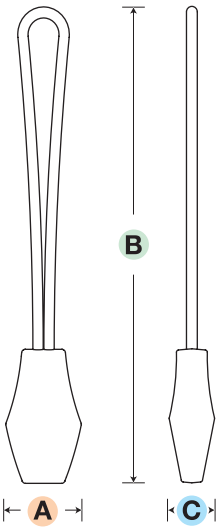


| CODE | A | B | C |
|---|---|---|---|
| CP0010A | 10 | 63 | 6 |

## CP0011A 繩索拉片 TPE

- Provides easy opening and closing of zippers.
- Reduced noise due to soft material.
- Cord is firmly attached during injection molding process.
- 輕鬆拉動
- 高強度及耐久性
- 1.5mm 雙繩

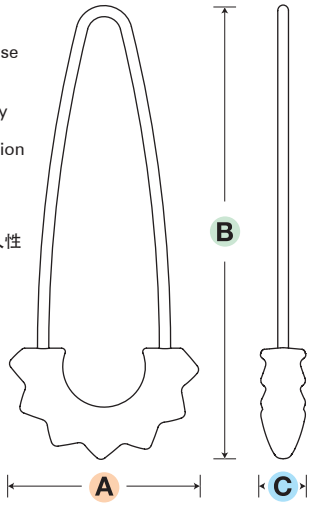


| CODE | A | B | C |
|---|---|---|---|
| CP0011A | 25 | 60 | 6 |

## CP0012A 繩索拉片 TPE

- Provides easy opening and closing of zippers.
- Reduced noise due to soft material.
- Cord is firmly attached during injection molding process.
- 輕鬆拉動
- 高強度及耐久性
- 1.5mm 雙繩

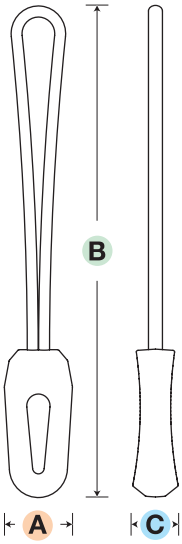


| CODE | A | B | C |
|---|---|---|---|
| CP0012A | 9 | 65 | 6 |

## CP0013A 繩索拉片 TPE

- Provides easy opening and closing of zippers.
- Reduced noise due to soft material.
- Cord is firmly attached during injection molding process.
- 輕鬆拉動
- 高強度及耐久性
- 1.5mm 雙繩

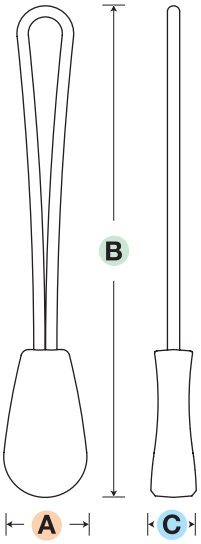


| CODE | A | B | C |
|---|---|---|---|
| CP0013A | 11 | 65 | 6 |

## CP0014A 繩索拉片 TPE

- Provides easy opening and closing of zippers.
- Reduced noise due to soft material.
- Cord is firmly attached during injection molding process.
- 輕鬆拉動
- 高強度及耐久性
- 1.5mm 雙繩

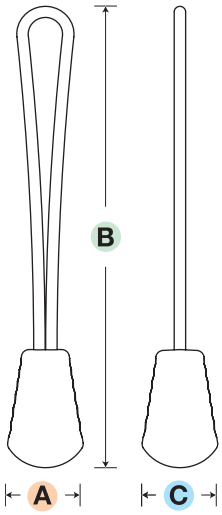


| CODE | A | B | C |
|---|---|---|---|
| CP0014A | 10 | 61 | 10 |

## CP0015A 繩索拉片 TPE

- Provides easy opening and closing of zippers.
- Reduced noise due to soft material.
- Cord is firmly attached during injection molding process.
- 輕鬆拉動
- 高強度及耐久性
- 1.5mm 雙繩

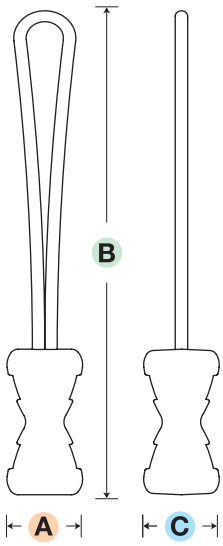


| CODE | A | B | C |
|---|---|---|---|
| CP0015A | 10 | 65 | 10 |

## CP002A 繩索拉片 TPE

- Provides easy opening and closing of zippers.
- Reduced noise due to soft material.
- Cord is firmly attached during injection molding process.

- 輕鬆拉動
- 高強度及耐久性
- 2.5mm 雙繩

| CODE | A | B | C |
|---|---|---|---|
| CP002A | 25 | 84 | 5 |

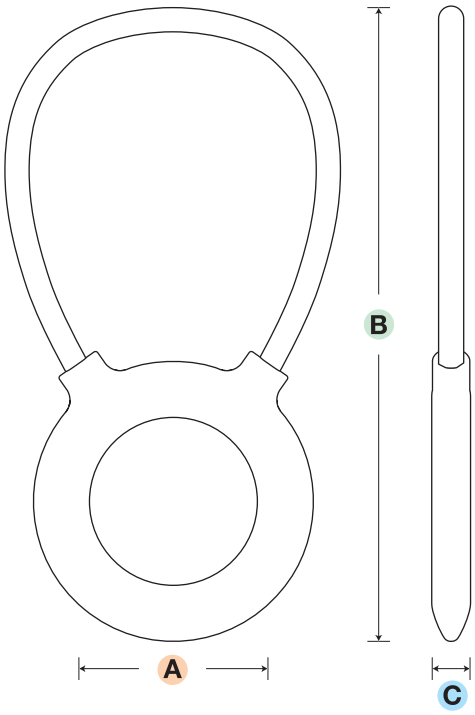

## CP004A 繩索拉片 TPE

- Provides easy opening and closing of zippers.
- Reduced noise due to soft material.
- Cord is firmly attached during injection molding process.

- 輕鬆拉動
- 高強度及耐久性
- 2.5mm 雙繩

| CODE | A | B | C |
|---|---|---|---|
| CP004A | 26 | 69 | 6 |

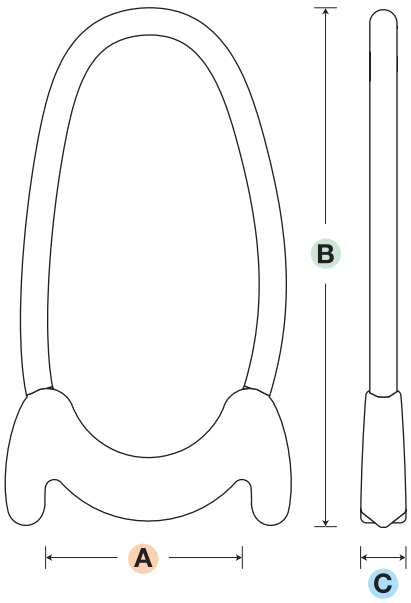

## POWERHOOK™ Button

FRONT 正面　BACK 反面

Logo

### 1QiBD-E 織帶尾夾 TPE

- Single process injection molded.
- Sewn directly onto the garment.
- 射出粘扣帶尾夾（公扣）是創新產品。
- 可直接車縫於產品上，使用拉片即可從毛面剝離。

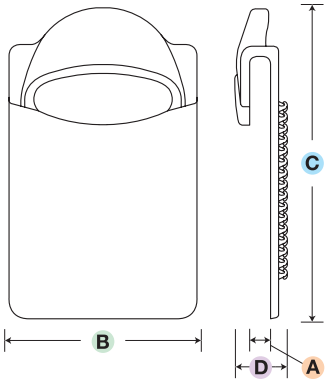


| CODE | SIZE | A | B | C | D |
|---|---|---|---|---|---|
| 1QiBD-E | 25mm | 3 | 26 | 42 | 7 |

### WE-DA1 織帶尾夾 TPE

- Sewn directly onto webbing.
- Adds a finished edge to webbing/tape end.
- 可車縫織帶尾夾。

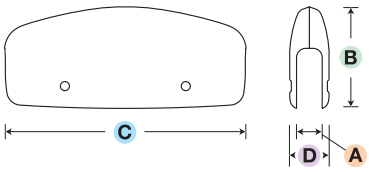


| CODE | SIZE | A | B | C | D |
|---|---|---|---|---|---|
| WE30DA1 | 30mm | 3 | 14 | 32 | 5 |

## Sewable

Logo

### LE-B 織帶尾夾 TPE

- Sewn directly onto webbing.
- Adds a finished edge to webbing/tape end.
- 可車縫織帶尾夾。

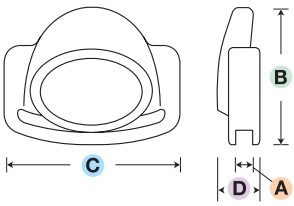


| CODE | SIZE | A | B | C | D |
|---|---|---|---|---|---|
| LE16B | 16mm | 2 | 16 | 19 | 5 |
| LE20B | 20mm | 2 | 18 | 23 | 5 |
| LE25B | 25mm | 2 | 20 | 28 | 5 |

## POWERHOOK™ Tapeend

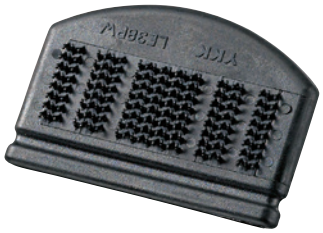

Logo

### LE-PW 織帶尾夾 TPE

- Sewn directly onto webbing.
- Molded hook on one surface making this item attachable to standard loop.
- 附有射出勾面之織帶尾夾（可車縫）。

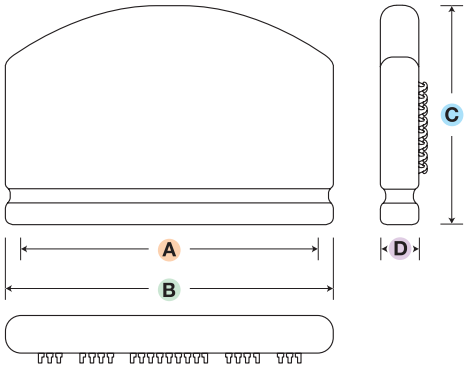


| CODE | SIZE | A | B | C | D |
|---|---|---|---|---|---|
| LE38PW | 38mm | 39 | 43 | 29 | 5 |

New

Natural

**Color variation**

Silver

Black Nickel

## AK-W 梯扣

- Lightweight
- Material :Aluminum
- Color: Natural / Silver / Black Nickel

- 輕量化造型。
- 鋁合金材料。
- 顏色：本色 / 銀色 / 黑鎳。

| CODE | SIZE | A | B | C | D |
|---|---|---|---|---|---|
| AK25W | 25mm | 25 | 31 | 33 | 14 |

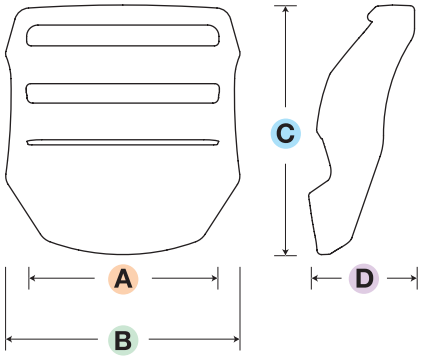


New

Natural

**Color variation**

Silver

Black Nickel

## AK-WL 梯扣

- Lightweight
- Material :Aluminum
- Color: Natural / Silver / Black Nickel

- 輕量化造型。
- 鋁合金材料。
- 顏色：本色 / 銀色 / 黑鎳。

| CODE | SIZE | A | B | C | D |
|---|---|---|---|---|---|
| AK25WL | 25mm | 25 | 31 | 33 | 14 |

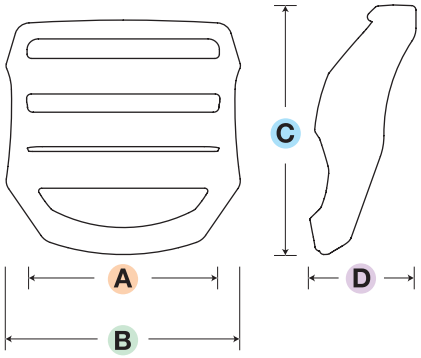

# Standard Colors

| | | | | | |
|---|---|---|---|---|---|
| 580 Black | 501 | 504 | 506 | 512 | 519 |
| 521 | 526 | 527 | 530 | 540 | 549 |
| 551 | 553 | 558 | 559 | 560 | 576 |
| 578 | 801 | 820 | 825 | 828 | 835 |
| 864 | 876 | 877 | 884 | 891 | 917 |
| 918 | 919 | 029 | 031 | 058 | 113 |
| 119 | 153 | 154 | 200 | 218 | 220 |
| 228 | 230 | 235 | 248 | 266 | 305 |
| 340 | 349 | TB006 | TE162 | TG102 | TJ130 |
| TL122 | TM128 | TM145 | TM423 | TN126 | TN134 |
| TP104 | TV790 | | | | |
| TX133 | TX432 | | | | |

This color chart is for reference only and is not to be used for final color matching.
Shades may vary due to the ink and printing resolution.
For best results, always request a product sample, select color under D65 light source.
Dye to Match Color available

色卡印刷顏色與實物多少有點差異，僅供參考，請以實體樣品顏色為主。
可依客戶需求打色。

# YKK Global Locations

| Area | Country/Region | Address | Tel/Fax |
|---|---|---|---|
| **North & Central America** | Atlanta | **YKK (U.S.A.) INC.**<br>1300 Cobb Industrial Drive<br>Marietta, Georgia 30066<br>U.S.A. | TEL : 1-770-427-5521<br>FAX : 1-770-421-3624 |
| | San Francisco | **YKK (U.S.A.) INC.**<br>555 Airport Boulevard, Suite #410<br>Burlingame, CA94010, U.S.A. | TEL : 1-650-581-5254<br>FAX : 1-650-343-3317 |
| | Dallas | **YKK (U.S.A.) INC.**<br>1400 Preston Road, Suite 260<br>Plano, TX75093, U.S.A. | TEL : 1-972-943-7770<br>FAX : 1-972-943-5938 |
| | Chicago | **YKK (U.S.A.) INC.**<br>2700 Patriot Blvd. Suite 180<br>Glenview, IL 60026, U.S.A. | TEL : 1-847-657-9295<br>FAX : 1-847-657-9356 |
| | Anaheim | **YKK (U.S.A.) INC.**<br>5001 East La Palma Avenue,<br>Anaheim, California 92807<br>U.S.A. | TEL : 1-714-701-1200<br>FAX : 1-714-701-1290 |
| | New York | **YKK (U.S.A.) INC.**<br>1411 Broadway, Suite 2510<br>New York, New York 10018<br>U.S.A. | TEL : 1-212-768-9776<br>FAX : 1-212-768-9775 |
| | Seattle | **YKK (U.S.A.) INC.**<br>1300 SW 7th Street, Suite 109<br>Renton, Washington 98057<br>U.S.A. | TEL : 1-425-277-2503<br>FAX : 1-425-277-2579 |
| | **CANADA**<br>Montreal | **YKK CANADA INC.**<br>3939 Thimens Boulevard,<br>Ville St. Laurent, Quebec H4R 1X3<br>CANADA | TEL : 1-514-332-3350<br>FAX : 1-514-332-9140 |
| | **MEXICO**<br>Mexico City | **YKK MEXICANA S.A. de C.V.**<br>Av. Añil (Eje 3 Sur) 571 1er. Piso Int. 103, Colonia Granjas Mexico,<br>Delegacion Iztacalco, CDMX, C.P. 08400, MEXICO | TEL : 52-55-5803-0690<br>FAX : 52-55-5803-0699 |
| | **EL SALVADOR**<br>San Juan Opico | **YKK EL SALVADOR S.A.DE C.V.**<br>Km 31.5 Autopista, a Santa Ana,<br>Jurisdiccion de San Juan Opico<br>La Libertad<br>EL SALVADOR, C.A. | TEL : 503-2319-1100<br>FAX : 503-2319-1190 |
| | **GUATEMALA**<br>El Naranjo | **YKK EL SALVADOR S.A. DE C.V.**<br>KM:30.5 Carretera CA9<br>Sur bodega 29 int. Purgue ind.<br>Zeta la union, Amatitlan Guatemala | TEL : 502-6644-0644<br>FAX : 502-6644-0645 |
| | **HONDURAS**<br>San Pedro Sula | **YKK HONDURAS S.A.**<br>Colonia San Fernando, 2da Calle N.E., No. 1226<br>San Pedro Sula, Cortes, Honduras | TEL : 504-2553-3164<br>FAX : 504-2553-1728 |
| **South America** | **BRAZIL**<br>Sao Paulo | **YKK DO BRASIL LTDA.**<br>Eldorado Business Tower 11 floor,<br>Av. Doutora Ruth Cardoso 8501,<br>Pinheiros, Sao Paulo/SP,<br>BRAZIL | TEL : 55-11-3066-1111<br>FAX : 55-11-3058-4755 |
| | **ARGENTINA**<br>Buenos Aires | **YKK ARGENTINA S.A.**<br>Av. Triunvirato 2729<br>CV1427AAA, Buenos Aires<br>REPUBLICA ARGENTINA | TEL : 54-11-4554-3333<br>FAX : 54-11-4553-5095 |
| **Europe, Middle East & Africa** | **UNITED KINGDOM**<br>London | **YKK EUROPE LTD.**<br>7th floor, Longbow House 14-20<br>Chiswell Street, London, EC1Y 4TW<br>UNITED KINGDOM | TEL : 44-20-7448-1333<br>FAX : 44-20-7448-1345 |
| | Runcorn | **YKK (U.K.) LTD.**<br>Whitehouse Industrial Estate,<br>Runcorn, Cheshire WA7 3BW<br>UNITED KINGDOM | TEL : 44-1928-713-737<br>FAX : 44-1928-718-768 |
| | **GERMANY**<br>Wuppertal | **YKK STOCKO FASTENERS GMBH**<br>Kirchhofstrasse. 52,<br>D-42327 Wuppertal<br>FED. REP. OF GERMANY | TEL : 49-202-7493-544<br>FAX : 49-202-7493-446 |
| | Mainhausen | **YKK DEUTSCHLAND GMBH**<br>Ostring 33<br>D-63533 Mainhausen<br>FED.REP.OF GERMANY | TEL : 49-6182-805-1570<br>FAX : 49-6182-805-1570 |
| | **FRANCE**<br>Paris | **YKK FRANCE SARL**<br>1 bis rue Collange,<br>92300 Levallois-Parret,<br>FRANCE | TEL : 33-1-40-89-62-00<br>FAX : 33-1-40-89-62-22 |
| | **ITALY**<br>Milano | **YKK ITALIA SPA**<br>Via Pitagora, 1 20016 Pero(MI)<br>ITALY | TEL : 39-02-3394051<br>FAX : 39-02-3533008 |
| | **SPAIN**<br>Barcelona | **YKK ESPANA SA**<br>Travessera de les Corts, 55 Bajos,<br>08028, Barcelona,<br>SPAIN | TEL : 34-93-447-9700<br>FAX : 34-93-447-9731 |

| Area | Country/Region | Address | Tel/Fax |
|---|---|---|---|
| **Europe, Middle East & Africa** | **TURKEY**<br>Istanbul | **YKK METAL ve PLASTIK URUNLERI**<br>Maslak Mahallesi Eski Buyukdere<br>Cad. No:27 orjin Maslak Plaza Kat:8<br>34398, Sariyer Istanbul, Turkey | TEL : 90-212-314-7900<br>FAX : 90-212-314-8040 |
| | **SOUTH AFRICA**<br>Johannesburg | **YKK SOUTHERN AFRICA (PTY) LTD.**<br>110 Bram Fischer Drive,<br>Ferndale Randburg. PO Box 2835,<br>Pinegowrie 2123<br>R. SOUTH AFRICA | TEL : 27-11-781-4240<br>FAX : 27-11-781-4250 |
| **China** | Beijing | **DALIAN YKK ZIPPER CO., LTD.**<br>1004 Baihuan Building,No66<br>Guangqu Road,<br>Chaoyang District,Beijing ,100025<br>CHINA | TEL : 86-10-5979-8626<br>FAX : 86-10-8586-0473 |
| | Shanghai | **SHANGHAI YKK ZIPPER CO.,LTD.**<br>7th. floor BaiYuLan Plaza, No.501<br>DongDaMing Road (M),<br>Shanghai 200080 CHINA | TEL : 86-21-2509-9988<br>FAX : 86-21-5405-0830 |
| | Shenzhen | **YKK ZIPPER SHENZHEN CO., LTD.**<br>Rm01-02, 16-21, 34 Floor China Shine Plaza, No3-15 LinHeXi Road, TianHe District, Guangzhou, Guangdong | TEL : 86-20-3847-7968<br>FAX : 86-20-3839-9832 |
| | **CHINA-Hong Kong**<br>Kowloon | **YKK HONG KONG LTD.**<br>14th Fl., Tower 2, Silvercord<br>30 Canton Road T.S.T., Kowloon<br>CHINA-HONG KONG | TEL : 852-2378-8300<br>FAX : 852-2375-6088 |
| **Asia** | **TAIWAN**<br>Taipei | **YKK TAIWAN CO., LTD.**<br>6Fl., No.40, Sec. 2,<br>Min-Chuan East Road, Taipei, 10469<br>TAIWAN | TEL : 886-2-2511-5157<br>FAX : 886-2-2563-5572 |
| | **KOREA**<br>Seoul | **YKK KOREA CO.,LTD.**<br>Danam Bldg, 20th Floor,<br>10, sowol-ro Jungu-gu<br>Seoul, 04527 Rep of KOREA | TEL : 82-2-3705-7900<br>FAX : 82-2-3705-7991 |
| | **SINGAPORE**<br>Singapore | **YKK HOLDING ASIA PTE.LTD.**<br>152, Beach Road, #08-02/04,<br>Gateway East, Singapore 189721<br>SINGAPORE | TEL : 65-6296-3035<br>FAX : 65-6296-5166 |
| | **VIETNAM**<br>Ho Chi Minh | **YKK VIETNAM CO., LTD.**<br>4th floor, AB Tower, 76 Le Lai,<br>Ben Thanh Ward, District 1,<br>Ho Chi Minh City, VIETNAM | TEL : 842-8-3823-3793<br>3794<br>FAX : 842-8-3823-3795<br>2113 |
| | **THAILAND**<br>Bangkok | **YKK (THAILAND) CO.,LTD.**<br>9th Flr., Manoonpol Bldg. 2,<br>2884/1 New Petchburi Road,<br>Bangkapi, Huaykwang, Bangkok 10310<br>THAILAND | TEL : 66-2-718-0590<br>FAX : 66-2-718-0591 |
| | **PHILIPPINES**<br>Manila | **YKK PHILIPPINES, INC.**<br>17th floor, Richiville Corporate Tower<br>1107 Alabang-Zapote Road, Madrigal Business Park,<br>Muntinlupa City, Metro Manila<br>PHILIPPINES | TEL : 63-2-807-8875<br>FAX : 63-2-807-8660 |
| | **INDONESIA**<br>Jakarta | **PT. YKK ZIPPER INDONESIA**<br>(P.O.Box 3108/Jkt.)<br>Jl. RP. Soeroso No.7<br>Jakarta Pusat 10330<br>INDONESIA | TEL : 62-21-3193-1708<br>FAX : 62-21-310-6751 |
| | **INDIA**<br>Delhi | **YKK INDIA PVT. LTD.**<br>Global Business Park, 3rd Floor,<br>Tower - A<br>Mehrauli - Gurgaon Road Gurgaon<br>Haryana 122002<br>INDIA | TEL : 91-124-3924-800<br>FAX : 91-124-3924-899 |
| | **AUSTRALIA**<br>Sydney | **YKK OCEANIA LTD (AUSTRALIA)**<br>Unit3, 1 the Crescent<br>Kingsgrove, NSW2208<br>AUSTRALIA | TEL : 61-2-9577-1955<br>FAX : 61-2-9577-1999 |
| | **NEW ZEALAND**<br>Auckland | **YKK OCEANIA LTD (NEW ZEALAND)**<br>49 Holmes Road Private Bag.<br>803 Manurewa, Auckland<br>NEW ZEALAND | TEL : 64-9-267-0400<br>FAX : 64-9-269-0287 |
| **Japan** | Tokyo | **YKK CORPORATION**<br>**FASTENING PRODUCTS GROUP**<br>**JAPAN COMPANY**<br>**TOKYO BUSINESS OFFICE**<br>PMO AKIHABARA KITA 1-31-7,<br>Taito, Taito-ku, Tokyo 110-0016,<br>JAPAN | TEL : 81-3-3837-9401<br>FAX : 81-3-3837-9456 |
| | Osaka | **OSAKA BUSINESS OFFICE**<br>Tanimachi YF Bldg.,<br>4-8-7, Tanimachi, Chuo-ku, Osaka,<br>540-0012, JAPAN | TEL : 81-6-6941-4110<br>FAX : 81-6-6941-4326 |

# ⚠ Information concerning safe operation

## Carefully read the following information so you can make the best and safest use of our fastening products.

**YKK goes to great lengths to maintain the quality and safety of our products while making sure they are comfortable for our customers to use.**
Our sales staff is prepared to assist you in all stages of your product development projects from planning to setting up specifications. Feel free to consult with them at any time.

### Caution

1. Our plastic hardware is primarily developed for luggage, bags and apparel. Please contact your local YKK Sales Representative if you use one of our products for a more specialised use, and especially when your use is :

   - Subject to particular standards, such as with personal flotation devices (PFDs), baby carriers or slings.
   - Weight bearing, such as on stretchers or safety belts.
   - Intended to reduce movement, such as in child seats or wheelchairs.
   - Providing safety features, such as with hard hats.

   This list is provided by way of example and is not intended to be exhaustive. We cannot guarantee that a product is suitable for a particular application therefore you should always conduct your own tests. If you cannot conduct tests because you are selling to retailers or direct to consumers, please always contact your local YKK Sales Representative.

2. Once our products are attached to other items, there may be approved ways to pack, store or ship them in order to ensure their continued high quality. For example, buckles should be correctly combined in order to avoid deformation breakage or detachment.

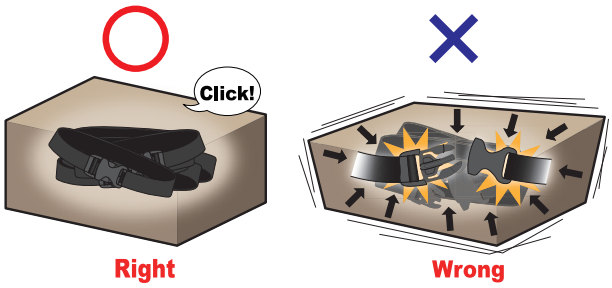


3. Please contact your sales representative about the certification of Oeko-Tex standard 100 or others.

### When using our products you should

1. Choose the right fastener for your application from our product line. Your YKK sales representative can help you understand the variety of our products, their sizes, strengths and specifications.

2. Select plastic hardware that is the appropriate size for the tape in your application.

3. Refrain from using plastic hardware that has been exposed to or is covered in dirt of any sort. Product damage or malfunction may arise if the plastic hardware is not clean.

4. Refrain from using plastic and metal parts in one unit because of the potential for product abrasion.

5. Refrain from using goods left outdoors for a long time, exposure to the sun and other elements may cause product discoloration and/or quality deterioration.

6. Avoid using items that have been in contact with or near a heat source. Heat may cause product deformation and/or quality deterioration.

7. Refrain from using goods that have been in direct or indirect contact with chemicals. Check for residual chemicals on all parts of plastic hardware whether applied by YKK or coming from another source.

8. Refrain from using a product in a position that is subject to pressure, impact, or abrasion or other condition where product deformation and/or damage may result.

9. Only make your choice of YKK product after adequate checks have been made. The strength of YKK products depend on the materials used; the texture; the thickness of webbing; the position of the weld line and other factors which you will need to take into account. For further information please contact your YKK sales representative.

10. Due to certain material combination, friction noise may be possible. If silent operation is necessary, please contact your YKK sales representative for detail.

**YKK will not be liable for any product liability claims or quality complaints in respect of any product which includes components not incorporated into the product by YKK or in respect of any product which has been altered in any way or undergone further processing subsequent to its sale by YKK.**

## Recommendations for using YKK Buckles

1. When fastening a buckle, insert the plug straight into the intended socket until you hear a clicking sound indicating the two parts are interlocking. Next lightly pull on both parts to confirm that they have been completely fastened. Incomplete fastening may result in product deformation and damage to any article attached to the buckle especially if the plug comes loose from the socket. If the two parts cannot be fastened together, check again for any foreign material. Do not try to force the plug into the socket.

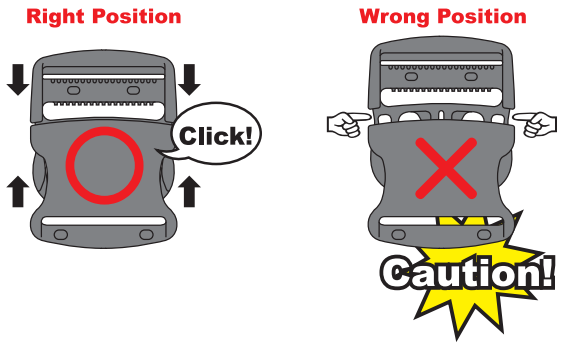


2. Buckles should not be used in positions where they will be put under external pressure.

3. All plastic material deteriorates over time. Buckles that have been used for a long time should be checked for damage, cracks, deformations and abrasions before each use. If any abnormalities are found, stop using them immediately. Use in such circumstances may cause further product damage and/or malfunctions.

4. Completely remove any foreign materials including dust, sand or mud from buckles before use.

5. Situations which involve the application of excessive pressure or impact force to a plastic fastener as for example when it is stepped on, struck or thrown, will result in a lowering of performance.

6. We will not be held responsible for damage to the buckles, or unauthorized modification of buckles.

## Material Properties

1. All our products are limited by the properties and qualities of the materials used.

2. Some products have a weld mark (the line of a bonded surface). The mark is not a defect, damage or crack. Please check the product carefully before using.

**YKK is not responsible for any defects, injuries or damages caused by the misuse/misapplication or remodeling of our products.**

# ⚠ 安全注意事項

## 為達到安全使用塑鋼、金屬扣具之目的，請務必詳閱本文件。

**本公司為貫徹產品之品質管理，一向注重於安全性之追求，以期能提供讓客戶安心使用之產品。**

### 注意

1. **本公司產品主要針對行李箱、包袋與成衣類而進行開發。請與本公司當地營業人員聯繫，如果將我們的產品使用於更專業的用途， 特別是當您使用於：**

   **具有指定標準規範產品，例如：救生衣(PFD)，嬰兒背袋或承重的吊索，例如：擔架或安全帶**
   **或需要緊固扣具來限制作動達到安全性目標，例如：兒童座椅/輪椅或安全帽..等產品。**

   **上述提醒產品別僅為部份使用範例，不作為對本公司產品是否能夠用於特定用途的保證。**
   **請務必進行充分測試後，再使用本公司產品。**
   **如果您因為向零售商銷售或直接向消費者銷售而無法進行測試，請務必聯繫當地的營業人員。**

2. 商品進行縫製、加工之後，由於扣具等是由兩個以上部件構成的組合產品，請務必將其扣合，並且以固定的狀態進行包裝、保管或者運輸。若扣具在未完全扣合的狀態下長時間承受負荷，可能引起塑料材料性質的變化、產品變形從而導致脫落等問題。

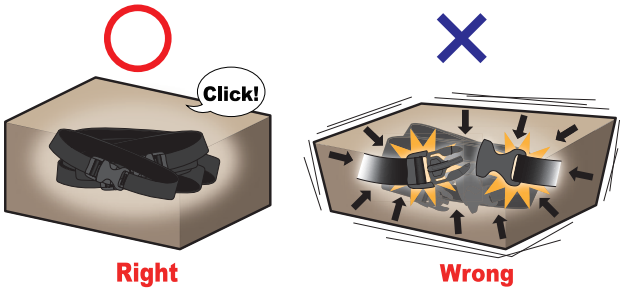


3. **對於YKK扣具是否符合相關環境要求的確認，請與YKK各營業單位詢問。**

### YKK產品使用須知

1. 本公司備有各種型號、尺寸、強度與規格的產品，請依據您的用途挑選合適產品。

2. 請選擇符合織帶（纖維製品）寬度的塑料製品。如果搭配的塑料製品與織帶尺寸不符，塑料製品可能會出現脫落、破損、無法確保產品功能的情況，織帶可能出現皺摺、扭曲變形之虞，敬請留意。

3. 將產品暴露於灰塵、沙土、污泥之中，將導致產品功能不彰、劣化，故請避免此類使用。

4. 將塑料製品與其他金屬產品組合使用時，很可能造成磨損，故請避免此類使用。

5. 將產品長時間放置於屋外曝曬，否則將造成褪色、劣化，故請避免此類使用。

6. 產品接觸熱源、在熱源附近使用或將產品置於高溫中，將造成產品變形、劣化，故請避免此類使用。

7. 產品直接或間接與化學藥品接觸，尤其與酸、鹼性物質共同使用，將造成產品物理性質的變化，故請避免此類使用。此外，請注意與產品一同使用的其他零件上殘留的化學物質。

8. 在長時間遭受壓迫、撞擊、磨損的場所使用產品，將導致產品變形、損壞，故請避免此類使用。

9. 扣具根據織帶（纖維製品）的材質、折疊方式和厚度的不同，扣具扣合時的強度也存在差異。請在充分測試和確認產品狀態的前提下進行使用。

10. **因扣具材質特性不同，彼此組合後 可能發生噪音現象，如有靜音要求的話，請與各營業單位洽詢。**

「对于任何包含非本公司零部件的产品或第三方实施了加工、改造的产品，本公司对产品质量及性能不承担任何责任」

## YKK產品操作須知

1. 使用扣具等由兩個以上部件構成的組合產品之時，請將公扣筆直插入母扣，直至發出喀嚓的扣合聲。之後，請輕拉扣具兩邊以確認是否完全扣合。在未完全扣合的情況下使用扣具，將致使產品變形、破損，請務必注意。

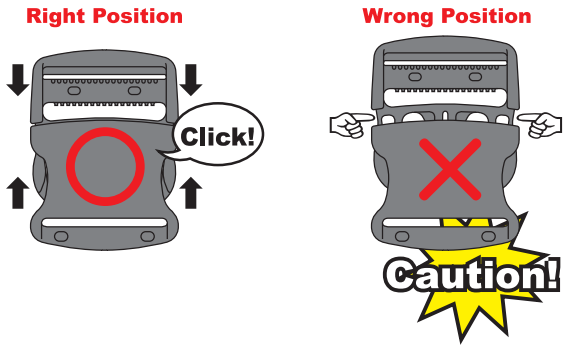


2. 扣具的操作部分易受外力影響，可能出現意外脫落情況，請立即停止使用。

3. 使用產品前，請確認扣具外觀上是否存在傷痕、破裂、變形等異常。外觀上的異常可能導致產品的損壞、功能不全，請立即停止使用。

4. 產品上附著有灰塵、泥沙時，可能導致產品的損壞、功能不全，請將其清理後再行使用。

5. 踩踏、敲擊、投擲等行為，可能造成產品承受過度的壓迫或者衝擊，導致產品出現損壞、功能不全的情況，請務必避免。

6. 使用產品時請務必注意可能出現的傷害。YKK對於採取錯誤或粗暴的產品使用方式，以及因擅自改造產品所造成的產品的損壞、人身的傷害以及其他任何損害不承擔任何責任。

## 有關材料特性的說明：

1. 由於本公司產品材料性質的原因，本公司產品使用方法中具有特別的限制。希望各位理解並按照正確的方法使用。

2. 由於採用樹脂材料，本公司產品的表面可能存在溶接細紋（溶接細紋是由於樹脂溶解分開後再次合流所產生的細紋）， 並非產品的表面瑕疵或產品品質問題。請在充分確認產品樣品的前提下進行使用。

**YKK對於採取錯誤的產品使用方式，以及因擅自改造產品所引發的「缺陷」、「傷害」、「損壞」將不負任何責任。**

YKK CORPORATION

Access to
**Plastic Hardware Item Page**

**http://www.ykkfastening.com**

"YKK" and the combined mark of "YKK Little Parts. Big Difference." are registered trademarks of YKK CORPORATION in Japan and other countries/regions.
"Sharpn'Loc", "CYBERLOC", "SHOCKONLOC", "LOCWAVE", "HAMMERLOC" and "ZIPCAP" are registered trademarks of YKK CORPORATION in Japan and other countries/regions.
"POWERHOOK" is a trademark of YKK CORPORATION in Japan and other countries/regions.

©2019. YKK CORPORATION
Printed in Japan
Oct. 2019 CEK Ⓣ